TERREBONNE PARISH COUNCIL

PUBLIC SERVICES COMMITTEE

Mr. Alidore "Al" Marmande	Chairman
Mr. Gerald Michel	Vice-Chairman
Mr. John Navy	Member
Ms. Arlanda Williams	Member
Mr. Scotty Dryden	Member
Ms. Christa Duplantis-Prather	Member
Mr. Darrin W. Guidry, Sr.	Member
Mr. Dirk Guidry	Member
Mr. Steve Trosclair	Member

In accordance with the Americans with Disabilities Act, if you need special assistance, please contact Venita H. Chauvin, Council Clerk, at (985) 873-6519 describing the assistance that is necessary.

AGENDA

November 27, 2017
5:30 PM

Parish Council Meeting Room

NOTICE TO THE PUBLIC: If you wish to address the Council, please complete the "Public Wishing to Address the Council" form located on either end of the counter and give it to either the Chairman or the Council Clerk prior to the beginning of the meeting. Individuals addressing the council should be respectful of others in their choice of words and actions. Thank you.

ALL CELL PHONES, PAGERS AND ELECTRONIC DEVICES USED FOR COMMUNICATION SHOULD BE SILENCED FOR THE DURATION OF THE MEETING

INVOCATION

PLEDGE OF ALLEGIANCE

CALL MEETING TO ORDER

ROLL CALL

1. RESOLUTION: Providing for the ratification of the appointment by Parish President Gordon E. Dove of the firm of All South Consulting Engineers, LLC to provide engineering services for the Bayou Country Sports Complex Project, and also authorizing Parish President Gordon E. Dove to execute the appropriate engineering contract documents for this project.

2. Discussion and possible action with regards to Browning Court dust emission (private shell driveway extends from East Park Avenue to the Intracoastal Canal).

3. RESOLUTION: Providing approval of Amendment No. 2 to the Engineering Agreement for Parish Project

No.16-SEW-12, South Wastewater Treatment Plant Levee Rehabilitation, Terrebonne Parish, Louisiana.

4. RESOLUTION: Awarding and authorizing the signing of the purchasing and installation Contract for Parish Project No. 17-ELECTGEN-52, Electric Generation Unit 16 Generator Oil Circuit Breaker (OCB) Emergency Replacement and Installation, Terrebonne Parish Consolidated Government, Terrebonne Parish, Louisiana, and authorizing the issuance of the Notice to Proceed.

5. Resolution giving notice of intent to adopt an Ordinance to create a No Parking Zone along Brittany Street on the south side, approximately 170', from Howard Avenue and on the north side, approximately 91', from Howard Avenue and ending at the intersection of Brittany Street and Saint Malo Street, and to provide for the installation of said signs and to address other matters relative thereto.

6. RESOLUTION: Giving notice of intent to amend Ordinance No. 8886 to create a "Handicapped Parking Only Zone" on Barrow Street, located at 521Barrow Street, starting at 43 feet from the corner of Barrow Street and Wood Street, as depicted on the attached map, and to provide for the installation of said signs and to address other matters relative thereto and calling a public hearing on December 13, 2017 at 6:30 p.m.

7. RESOLUTION: Authorizing the execution of Change Order No. 1 (Final) for the Construction Agreement for Parish Project No. 12-PW-CDBG-64, DPW Administrative Building – Survey & Telemetry Building, Terrebonne Parish, Louisiana.

8. RESOLTION: Providing for the acceptance of work performed by B.E.T. Construction, Inc., in accordance with the Certificate of Substantial Completion for Parish Project 12-PWCDBG-64, DPW Administrative Building, Terrebonne Parish, Louisiana.

9. RESOLUTION: Awarding and authorizing the signing of the construction Contract for Parish Project No. 14-HPD-14, Critical Facilities Hardening – Houma Police Department (HMGP), Terrebonne Parish Consolidated Government, Terrebonne Parish, Louisiana, and authorizing the issuance of the Notice to Proceed.

10. RESOLUTION: Awarding and authorizing the signing of the construction Contract for Parish Project No. 17-PAV-01, Falgout Canal Road Paving Project, Terrebonne Parish Consolidated Government, Terrebonne Parish, Louisiana, and authorizing the issuance of the Notice to Proceed.

11. RESOLUTION: Authorizing the execution of Change Order No. 8 for the Construction Agreement for Parish Project No. 97-PAV-21, State Project No. H.007351, Country Drive Widening Phase A.

12. Adjourn

Category Number:
Item Number:

Monday, November 27, 2017

Item Title:
Invocation

Item Summary:
INVOCATION

Category Number:
Item Number:

Monday, November 27, 2017

Item Title:
Pledge of Allegiance

Item Summary:
PLEDGE OF ALLEGIANCE

Category Number:
Item Number: 1.

Monday, November 27, 2017

Item Title:
Appointment of ASCE for BCSP

Item Summary:
RESOLUTION: Providing for the ratification of the appointment by Parish President Gordon E. Dove of the firm of All South Consulting Engineers, LLC to provide engineering services for the Bayou Country Sports Complex Project, and also authorizing Parish President Gordon E. Dove to execute the appropriate engineering contract documents for this project.

ATTACHMENTS:

Description	Upload Date	Type
Executive Summary	11/20/2017	Executive Summary
Resolution	11/20/2017	Resolution
Backup	11/20/2017	Backup Material

EXECUTIVE SUMMARY

(REQUIRED FOR ALL SUBMISSIONS)

PROJECT TITLE
St. Louis Canal Drainage Improvements Project

PROJECT SUMMARY (200 WORDS OR LESS)
To appoint All South Consulting Engineers, LLC to provide engineering services for the Bayou Country Sport Park Project.

PROJECT PURPOSE & BENEFITS (150 WORDS OR LESS)
The purpose of this appointment is to provide engineering services for the expansion of the Bayou Country Sports Park.

TOTAL EXPENDITURE				
30,000				
AMOUNT SHOWN ABOVE IS: (CIRCLE ONE)				
ACTUAL			ESTIMATED	
IS PROJECTALREADY BUDGETED: (CIRCLE ONE)				
N/A	NO	YES	IF YES AMOUNT BUDGETED:	$30,000

COUNCIL DISTRICT(S) IMPACTED (CIRCLE ONE)									
PARISHWIDE	1	2	3	4	5	6	7	8	9

Jeanne P. Bray 11/20/2017

_____ _____

Signature Date

OFFERED BY:
SECONDED BY:

R E S O L U T I O N

A resolution providing for the ratification of the appointment by Parish President Gordon E. Dove of the firm of All South Consulting Engineers, LLC to provide engineering services for the Bayou Country Sport Park Project, and also authorizing Parish President Gordon E. Dove to execute the appropriate engineering contract documents for this project.

WHEREAS, Terrebonne Parish is desirous of the expansion and improvements for the Bayou Country Sports Park Project, and

WHEREAS, the Terrebonne Parish Consolidated Government would like to proceed with design of this project, and

WHEREAS, Parish President Gordon E. Dove has recommended that the firm of All South Consulting Engineers, LLC be retained to provide the necessary professional services for this project, and

NOW, THEREFORE BE IT RESOLVED, that the Terrebonne Parish Council, on behalf of the Terrebonne Parish Consolidated Government, that the Parish President Gordon E. Dove be ratified and that the engineering firm of All South Consulting Engineers, LLC be retained to provide the necessary professional services for the Bayou Country Sport Park Project and that Parish President Gordon E. Dove be authorized to execute any and all documents with said firm for this project.

THERE WAS RECORDED:

YEAS:
NAYS:
NOT VOTING:
ABSENT

And the Chairman declared the resolution adopted on this _____ day of _____, 2017.

* * * * * *

I, VENITA CHAUVIN, Clerk of the Terrebonne Parish Council, Houma, Louisiana, do hereby certify that the foregoing is a true and correct copy of the RESOLUTION adopted by the Terrebonne Parish Council on _____, 2017, at which meeting a quorum was present.

GIVEN UNDER MY OFFICIAL SIGNATURE AND SEAL OF OFFICE THIS _____ DAY OF _____, 2017

_____
VENITA CHAUVIN, CLERK
TERREBONNE PARISH COUNCIL

All South Consulting Engineers
www.ascellc.com

November 20, 2017

Ms. Jeanne Bray
Capital Projects Administrator
Terrebonne Parish Consolidated Government
2000 St. Louis Canal Road
Houma, LA 70364

Re: Proposal for Professional Services
Bayou Country Sports Park – Planning

Jeanne,

Please accept the following proposal for professional services for the Bayou Country Sports Park. Our services as they relate to this proposal include planning and conceptual layout of soccer fields, concession stand/restrooms, sewer and potable water services and parking facilities, topographic surveying and any additional services which may be requested by the Owner. All work will be consistent with the overall sports park master plan and we will coordinate our efforts with Terrebonne Parish Consolidated Government (TPCG). In addition, and where applicable, we will coordinate our efforts with the Houma Terrebonne Soccer Association. We understand the budget for these services is $30,000.00.

The deliverables for this effort will include plan view layout drawings depicting conceptual layouts of soccer fields, parking facilities, cost estimates, etc. We understand other deliverables may be required such as various facility layouts and cost estimates, survey staking, etc. and that these additional deliverables will be requested by the Owner, if desired.

All South proposes to provide these services on a time and materials basis to the TPCG using our 2017 Rate Schedule (attached).

We appreciate this opportunity to provide professional services to TPCG and our community and please do not hesitate to contact me if you have any questions or require additional information.

Sincerely,
All South Consulting Engineers, LLC

Walter P. Medley
Project Manager

Category Number:
Item Number: 2.

Monday, November 27, 2017

Item Title:
Browning Court dust emissons

Item Summary:
Discussion and possible action with regards to Browning Court dust emission (private shell driveway extends from East Park Avenue to the Intracoastal Canal).

ATTACHMENTS:

Description	Upload Date	Type
Browning Court	11/21/2017	Backup Material

6/27/12	Ms. Betty Henry, local resident, - shell road extending from East Park Ave. to Intracoastal Canal, affected by dust	The Chairwoman recognized Ms. Betty Henry, local resident, who presented photographs of a shell road and ditch extending from East Park Avenue to the Intracoastal Canal, and noted she has been affected by dust from the vehicular roadway. She inquired as to why she was not notified of the roadway's construction; added that the structural foundation of her home and pool deck have been affected by the vibrations; and requested assistance to resolve these problems.
6/27/12	Ms. Betty Henry, local resident, - shell road extending from East Park Ave. to Intracoastal Canal, affected by dust	Planning & Zoning Director Patrick Gordon stated that Administration has spoken with Ms. Henry; that the "shell roadway" is actually a driveway leading to the industrial facility located along the Intracoastal Canal; that the driveway is a 50-foot right-of-way which is part of the Village East Industrial Park Master Plan; that the right-of-way has been in existence for several years; that when Ms. Henry purchased her property, the 50-ft. corridor was left open to provide ingress and egress to the rear property; that Lowland Construction Company developed the property to the rear of Ms. Henry's property; that the matter was submitted to the Houma-Terrebonne Regional Planning Commission, however the application was withdrawn due to the owner and developer entering into a lease agreement rather than having lots of record. (SEE MINUTES FOR ALL OF MR. GORDON'S COMMENTS & DISCUSSION)
6/27/12	Ms. Betty Henry, local resident, - shell road extending from East Park Ave. to Intracoastal Canal, affected by dust	"THAT, the Public Services Committee direct the Council Clerk to send a letter to Village East Realty and Lowland Construction Company requesting that the aforementioned private driveway be sprayed with calcium chloride to prevent air pollution emissions and that speeding concerns be addressed." **(**MOTION AMENDED AND ADOPTED AFTER DISCUSSION)** (SEE MINUTES FOR DISCUSSION)
6/27/12	Ms. Betty Henry, local resident, - shell road extending from East Park Ave. to Intracoastal Canal, affected by dust	****AMENDED MOTION:** "THAT, the Public Services Committee, in the event that a meeting to resolve speeding and dust control problems between all interested parties regarding the shell driveway extending from East Park Avenue to the Intracoastal Canal proves to be unsuccessful, directs the Council Clerk to send a letter to Village East Realty and to Lowland Construction Company requesting consideration of spraying the shell driveway with calcium chloride to prevent dust emissions

		and to address speeding concerns." **MOTION ADOPTED NAYS: A. Williams.**
10/24/12	Village East Reality & Lowland Const. Co. – notice of meeting (dust emissions)	In response to questioning regarding responses from Village East Realty and Lowland Construction Company, Council Clerk Charlette Poché stated that letters were sent to both, however, each letter was returned as undeliverable.
10/24/12	Village East Reality & Lowland Const. Co. – notice of meeting (dust emissions) private driveway (Browning Court) off East Park	"THAT, the Public Services Committee retain the matter relative to dust emissions and air quality issues along a private shell driveway (Browning Court) off East Park Avenue in committee for continued review." **(**SUBSTITUTE MOTION OFFERED AND ADOPTED AFTER DISCUSSION)**
10/24/12	Village East Reality & Lowland Const. Co. – notice of meeting (dust emissions) private driveway (Browning Court) off East Park	In response to questioning, Parish Manager Al Levron suggested that if there is bona fide air emissions problem that can be verified, a complaint may be submitted to the Department of Environmental Quality for investigation and inspection.
10/24/12	Village East Reality & Lowland Const. Co. – notice of meeting (dust emissions) private driveway (Browning Court) off East Park	****SUBSTITUTE MOTION:** 'THAT, the Public Services Committee send a letter to the Department of Environmental Quality requesting an inspection of air quality due to dust emissions along a shell driveway (Browning Court) extending from East Park Avenue to the Intracoastal Canal." **SUBSTITUTE MOTION ADOPTED**
10/24/12	Village East Reality & Lowland Const. Co. – notice of meeting (dust emissions) private driveway (Browning Court) off East Park	Committee Member J. Navy expressed his desire to retain the matter relative to dust emissions/air quality along a private shell driveway (Browning Court) adjacent to 9799 East Park Avenue.
10/24/12	Village East Reality & Lowland Const. Co. – notice of meeting (dust emissions) private driveway (Browning Court) off East Park	Committee Member B. Amedée questioned how the appropriate parties may be notified if the addresses on file are incorrect.
10/24/12	Village East Reality & Lowland Const. Co. – notice of meeting (dust emissions) private driveway (Browning	The Chairwoman requested that the Council Clerk research and determine the correct mailing addresses for Lowland Construction Company and Village East Realty, and send additional letters requesting that a representative

	Court) off East Park	of each attend the next committee meeting to discuss the aforementioned matter.
10/24/12	Village East Reality & Lowland Const. Co. – notice of meeting (dust emissions) private driveway (Browning Court) off East Park	"THAT, the Public Services Committee retain the matter relative to dust emissions and air quality issues along a private shell driveway (Browning Court) off East Park Avenue in committee for further consideration." MOTION ADOPTED
11/14/12	Update of Browning Court Issue to reduce dust problems	Councilman J. Navy announced an updated status on the Browning Court issue, in that Low Land Construction is planning to spray calcium chloride in order to reduce the dust problems.
11/28/12	Browning Court – dust emissions – response from DEQ	In response to questioning regarding the private shell driveway (Browning Court) which extends from East Park Avenue to the Intracoastal adjacent to Village East Subdivision, Council Clerk Charlette Poché stated that a response has been received from the Department of Environmental Quality noting that three (3) field inspections were conducted and that one inspection revealed a large dust emission; that a Field Interview Form and Notice of Deficiency was issued for failure to control particulate emissions to Mr. Arthur Cenac as a result of the inspection; that the LA DEQ will work with the cited party to institute Best Management Practices to control any future offsite emissions of dust from the roadway; and that LA DEQ will advise the Terrebonne Parish Council as to the next course of action if the matter is not resolved in a timely manner.
11/28/12	Browning Court – dust emissions – response from DEQ	"THAT, the Public Services Committee retain the matter relative to speeding and dust emission control problems along a private shell driveway on Browning Court which extends from East Park Avenue to the Intracoastal Canal along Village East Subdivision in committee for future discussion, if necessary**." (**MOTION ADOPTED AFTER BRIEF COMMENTS)**
11/28/12	Browning Court – dust emissions – response from DEQ	Committee Member J. Navy noted that calcium chloride has recently been spread on the private shell driveway by Low Land Construction Company to suppress the dust emissions.
11/28/12	Notice received from DEQ – Browning Court dust situation	Councilman J. Navy announced that a notice had been received from the LA Department of Environmental

Quality about the dust situation on Browning Court which indicated that all entities are going to work together to alleviate this problem.

Category Number:
Item Number: 3.

Monday, November 27, 2017

Item Title:
Amendment 2 for South Treatment Plant Levee Rehabilitation

Item Summary:
RESOLUTION: Providing approval of Amendment No. 2 to the Engineering Agreement for Parish Project No.16-SEW-12, South Wastewater Treatment Plant Levee Rehabilitation, Terrebonne Parish, Louisiana.

ATTACHMENTS:

Description	Upload Date	Type
Executive Summary	11/21/2017	Executive Summary
Resolution	11/21/2017	Resolution
Backup Material	11/21/2017	Backup Material

EXECUTIVE SUMMARY

(REQUIRED FOR ALL SUBMISSIONS)

PROJECT TITLE
16-SEW-12 South Wastewater Treatment Plant Levee Rehabilitation

PROJECT SUMMARY (200 WORDS OR LESS)
To provide additional engineering services for the South Wastewater Treatment Plant Levee Rehabilitation due additional project oversight.

PROJECT PURPOSE & BENEFITS (150 WORDS OR LESS)
The purpose of this amendment is to provide project close out.

TOTAL EXPENDITURE				
$2,500.00				
AMOUNT SHOWN ABOVE IS: (CIRCLE ONE)				
	ACTUAL		**ESTIMATED**	
IS PROJECTALREADY BUDGETED: (CIRCLE ONE)				
N/A	**NO**	**YES**	**IF YES AMOUNT BUDGETED:**	**$2,500.00**

COUNCIL DISTRICT(S) IMPACTED (CIRCLE ONE)									
PARISHWIDE	1	2	3	4	5	6	7	8	9

Gregory E. Bush _____ _____11/21/17_____

Signature Date

OFFERED BY:
SECONDED BY:

R E S O L U T I O N

A resolution providing approval of Amendment No. 2 to the Engineering Agreement for Parish Project No.16-SEW-12, South Wastewater Treatment Plant Levee Rehabilitation, Terrebonne Parish, Louisiana.

WHEREAS, the Terrebonne Parish Consolidated Government did enter into an original engineering agreement with GIS Engineering, LLC dated May 23, 2016, recordation number 1507691, for the South Wastewater Treatment Plant Levee Rehabilitation Project identified as Parish Project 16-SEW-12, and

WHEREAS, the Engineering Agreement between OWNER and ENGINEER provides for certain limitations for Additional Services, and

WHEREAS, the engineer has informed the Terrebonne Parish Consolidated Government that additional project oversight is needed to close out the project due to the construction contract being extended, and

WHEREAS, Amendment No. 2 proposes to increase the fees to include additional Project Representation, and

WHEREAS, this above work will increase the Additional Services by $2,500.00, and

NOW, THEREFORE BE IT RESOLVED that the Terrebonne Parish Council, on behalf of the Terrebonne Parish Consolidated Government, does hereby approve this Amendment No. 2 to the Engineering Agreement for an overall increase of $2,500.00 and authorizes Parish President Gordon E. Dove to execute this Amendment No. 2 to the Engineering Agreement for the South Wastewater Treatment Plant Levee Rehabilitation, Parish Project No. 16-SEW-12, with GIS Engineering, LLC, and

BE IT FURTHER RESOLVED that a certified copy of the resolution be forwarded to the Engineer, GIS Engineering, LLC

THERE WAS RECORDED:
YEAS:
NAYS:
NOT VOTING:
ABSENT

And the Chairman declared the resolution adopted on this _____ day of _____, 2017.

* * * * * *

I, VENITA H. CHAUVIN, Clerk of the Terrebonne Parish Council, Houma, Louisiana, do hereby certify that the foregoing is a true and correct copy of the RESOLUTION adopted by the Terrebonne Parish Council on _____, 2017, at which meeting a quorum was present.

GIVEN UNDER MY OFFICIAL SIGNATURE AND SEAL OF OFFICE THIS _____ DAY OF _____, 2017.

_____
VENITA H. CHAUVIN, CLERK
TERREBONNE PARISH COUNCIL

AMENDMENT NO.2
TO
ENGINEERING AGREEMENT

THIS AMENDMENT NO. 2, hereafter sometimes referred to as "AGREEMENT", made and entered into this _____day of _____, 2017;

BY AND BETWEEN:

TERREBONNE PARISH CONSOLIDATED GOVERNMENT, (TPCG), a political subdivision of the State of Louisiana, represented herein by its duly authorized Parish President, Gordon E. Dove (hereafter sometimes referred to as "OWNER"), and

GIS Engineering, LLC., represented herein by Dustin M. Malbrough, P.E., duly authorized Division Manager (hereafter sometimes referred to as "ENGINEER"):

is a revision pursuant Section 5.1.2 (Additional Services) to the ENGINEERING AGREEMENT dated May 23, 2016 for professional engineering services between the OWNER and ENGINEER.

WHEREAS, the Terrebonne Parish Consolidated Government did enter into an original engineering agreement with **GIS Engineering, LLC** dated May 23, 2016, for the **South Wastewater Treatment Plant Levee Rehabilitation** identified as **Parish Project No. 16-SEW-12**, and

WHEREAS, the Engineering Agreement between OWNER and ENGINEER provides for certain limitations for Additional Services, and

WHEREAS, the engineer has informed the Terrebonne Parish Consolidated Government that additional project oversight is needed to close out the project due to the construction contract being extended, and

WHEREAS, Amendment No. 2 proposes to increase the fees to include additional Project Representation, and

WHEREAS, this above work will increase the Additional Services by $2,500.00, and

NOW THEREFORE, be it understood and agreed by the parties hereto to amend the “Agreement” as follows:

Section 5, Paragraph 5.1.2.1, to reads as follows:

5.1.2.1 General. For Additional Services rendered under Paragraphs 2.1.1 through 2.1.17, inclusive (except services covered by Paragraph 2.1.7 and services as a consultant or witness under 2.1.16), on the basis of Exhibit "D", **Professional Services Rate Schedule –2016.** At this time, the following additional services are anticipated and the Estimated Costs

shown below are recommended for budgetary considerations.

Additional Services		Estimated Cost
2.1.1	Permitting	$ 6,470.00
2.1.2	Measuring Existing Conditions	$ 1,000.00
2.1.9	Field Surveys	$ 3,000.00
2.1.12	Record Drawings	$ 3,500.00
	Total	**$ 13,970.00**

Amend Section 5, Paragraph 5.1.2.4, to read as follows:

5.1.2.4 Resident Project Services. For resident services during construction furnished under Paragraph 2.2.1, on the basis of Exhibit "D" for services rendered by principals and employees assigned to field offices in connection with resident project representation with a Limitation of Cost of **$20,500.00.**

Section 5, Paragraph 5.1.5, to reads as follows:

5.1.5 The estimated cost of Paragraphs 5.1.2, 5.1.3, and 5.1.4, shall have a combined Limitations of Cost in the amount of **$33,970.00,** which shall not be exceeded without the issuance of a formal change order authorized by the Terrebonne Parish Consolidated Government through its duly authorized President.

NOW THEREFORE, be it understood and agreed by the parties hereto amend the contract as follows:

IN WITNESS WHEREOF, the parties hereto have affixed their legal hands on this _____ day of _____, 2017.

OWNER:
TERREBONNE PARISH
CONSOLIDATED GOVERNMENT
HOUMA, LOUISIANA

BY: _____
Gordon E. Dove
Parish President

_____
WITNESS

_____
WITNESS

ENGINEER:
GIS ENGINEERING, LLC
HOUMA, LOUISIANA

BY: _____
Dustin M. Malbrough, P.E,
Division Manager

_____
WITNESS

_____
WITNESS

ENGINEERING LLC

Coastal Design & Infrastructure
197 Elysian Drive
Houma, LA 70363
P: (985) 219-1000 | F: (985) 475-7014
www.gisyeng.com

November 13, 2017

Terrebonne Parish Consolidated Government
Pollution Control
2000 St. Louis Canal Road
Houma, Louisiana 70364

Attention: **Ms. Ashley McKey Callahan, Engineering Analyst**
Subject: **Amendment No. 2 Proposal – Construction Oversight**
Reference: **South Wastewater Treatment Plant Levee Rehab Project**

Ms. Callahan:

GIS Engineering, LLC (GIS) is pleased to submit this Amendment No. 2 proposal to continue providing Professional Engineering Services to the Terrebonne Parish Consolidated Government (TPCG) for services to be completed on the above referenced project. These proposed services are for construction oversight needed in order to complete the remaining portion of construction activities such as coordinate and review final levee surveys taken by the contractor, coordinate final balance of project quantities (balancing change order) with the contractor, and prepare final closeout documents.

The contract time having been extended by 45 calendar days due to inclement weather is one of the main contributors to the need of additional construction oversight funds. The contract time extension, along with GIS wanting to assure the product being constructed and delivered to TPCG upholds the highest of standards set by GIS, including verifying all material testing and specifications, monitoring for material change along the levee alignment, closely monitoring surveys, and assuring that the levee is being installed as per the design template since the material for this contract is being measured by net section in place.

PROPOSED COST
GIS proposes to provide the remaining Additional Services on a Time & Material basis as outlined below.

	Current Contract	Amendment 2 Request	Total
Additional Services			
Existing Conditions	$ 1,000.00		**$ 1,000.00**
Engineering Surveys	$ 3,000.00		**$ 3,000.00**
Resident Project Representation	$ 18,000.00	$ 2,500.00	**$ 20,500.00**
As-Built Drawings	$ 500.00		**$ 500.00**
ODC's	$ 2,500.00		**$ 2,500.00**
Permitting (Phase I)	$ 3,110.00		**$ 3,110.00**
Permitting (Phase II)	$ 3,360.00		**$ 3,360.00**
TOTAL ADDITIONAL SERVICES	**$ 31,470.00**	**$ 2,500.00**	**$ 33,970.00**

By submitting this letter, GIS affirms that we are willing to continue performing our professional engineering services in accordance with the terms and conditions of our existing contract with TPCG, dated May 31, 2016.

We appreciate the opportunity to continue working with you on this project. If you have any questions or require any additional information, please contact me at 985-219-1000.

Sincerely,

Christopher J. Jeanice, P.E.
Project Manager
GIS Engineering, LLC

CJJ:jkf

Category Number:
Item Number: 4.

Monday, November 27, 2017

Item Title:
Electric Generation Unit 16 Generator Breaker Emergency Purchasing and Installation, Parish Project number 17-ELECTGEN-52

Item Summary:
RESOLUTION: Awarding and authorizing the signing of the purchasing and installation Contract for Parish Project No. 17-ELECTGEN-52, Electric Generation Unit 16 Generator Oil Circuit Breaker (OCB) Emergency Replacement and Installation, Terrebonne Parish Consolidated Government, Terrebonne Parish, Louisiana, and authorizing the issuance of the Notice to Proceed.

ATTACHMENTS:

Description	Upload Date	Type
Executive Summary	11/21/2017	Executive Summary
Resolution	11/21/2017	Resolution
Backup	11/21/2017	Backup Material

EXECUTIVE SUMMARY

(REQUIRED FOR ALL SUBMISSIONS)

PROJECT TITLE

Electric Generation Unit 16 Generator Breaker Emergency Purchasing and Installation, Parish Project Number 17-ELECTGEN-52

PROJECT SUMMARY (200 WORDS OR LESS)

Authorize lowest bid firm contingent upon bids received for Electric Generation Unit 16 Generator Breaker Emergency Purchasing and Installation, Parish Project Number 17-ELECTGEN-52

PROJECT PURPOSE & BENEFITS (150 WORDS OR LESS)

To purchase emergency replacement and installation on the Electric Generation Unit 16 Generator Oil Circuit Breaker (OCB) and return the unit to operating status.

TOTAL EXPENDITURE

$60,000.00

AMOUNT SHOWN ABOVE IS: (CIRCLE ONE)

ACTUAL | (ESTIMATED)

IS PROJECTALREADY BUDGETED: (CIRCLE ONE)

N/A	(NO)	YES	IF YES AMOUNT BUDGETED:	Account # 303-802-8915-06

COUNCIL DISTRICT(S) IMPACTED (CIRCLE ONE)

(PARISHWIDE)	1	2	3	4	5	6	7	8	9

Signature

11/20/17

Date

OFFERED BY:
SECONDED BY:

R E S O L U T I O N

A resolution awarding and authorizing the signing of the purchasing and installation Contract for Parish Project No. 17-ELECTGEN-52, Electric Generation Unit 16 Generator Oil Circuit Breaker (OCB) Emergency Replacement and Installation, Terrebonne Parish Consolidated Government, Terrebonne Parish, Louisiana, and authorizing the issuance of the Notice to Proceed.

WHEREAS, the Electric Generation completed maintenance testing on Unit 16 Generator Oil Circuit Breaker (OCB) which failed safety operating specification. Vendor recommended total breaker replacement, and

WHEREAS, Terrebonne Parish Consolidated Government will receive bids on Parish Bid No. 17-ELECTGEN-52, Electric Generation Unit 16 Generator Oil Circuit Breaker (OCB) Emergency Replacement and Installation, and

WHEREAS, the Parish desired to authorize the award to the firm that submits the lowest responsive, responsible bid contingent upon bids receive for the Electric Generation Unit 16 Generator Oil Circuit Breaker (OCB) Emergency Replacement and Installation for Parish Bid No. 17-ELECTGEN-52, and

WHEREAS, the purpose of this emergency repair is to return Unit 16 back to normal operating status, and

NOW, THEREFORE, BE IT RESOLVED by the Terrebonne Parish Council, on the behalf of the Terrebonne parish Consolidated Government, authorizes the Parish President to award a purchasing contract to the firm that submits the lowest responsive, responsible bid contingent upon budget adjustment, and

BE IT FURTHER RESOLVED, that the Parish President be authorized to execute all necessary documents to authorize the lowest responsive, responsible bidder on Parish Bid No. 17-ELECTGEN-52, Unit 16 Generator Oil Circuit Breaker (OCB), to proceed with all necessary services for the completion of the project.

WHEREUPON the motion was put to a vote and the vote thereon was as follows:

YEAS:
NAYS:
NOT VOTING:
ABSENT

And the Chairman declared the resolution adopted on this _____ day of _____, 2017.

* * * * * *

I, VENITA H. CHAUVIN, Clerk of the Terrebonne Parish Council, Houma, Louisiana, do hereby certify that the foregoing is a true and correct copy of the RESOLUTION adopted by the Terrebonne Parish Council on _____, 2017, at which meeting a quorum was present.

GIVEN UNDER MY OFFICIAL SIGNATURE AND SEAL OF OFFICE THIS _____ DAY OF _____, 2017.

_____
VENITA H. CHAUVIN
COUNCIL CLERK
TERREBONNE PARISH COUNCIL

TERREBONNE PARISH CONSOLIDATED GOV'T
Houma, LA

Preventative Maintenance and Electrical Testing of Generator No. 16 Step-Up Transformer and Generator No. 16 Auxiliary Power Transformer

November 8-9, 2017

UMS W.O. #94-035.249

UTILITY MAINTENANCE SPECIALISTS

UMS

NEW IBERIA, LA

4007 Vida Shaw Rd.*New Iberia, LA 70563*Phone (337) 944-6152*Fax (337) 944-6154

JOB SUMMARY

Beginning on Wednesday November 8, 2017, Utility Maintenance Specialists, Inc. senior field Technicians Dusty Hoffpauir and Jonathan Murray traveled to Houma, LA for the purpose of performing preventative maintenance and electrical testing on the Generator No. 16 Step Up Transformer and the Generator No. 16 Auxiliary Power Transformer located at the Steam Plant facility. Upon arrival, the UMS representatives worked with the T.P.C.G. personnel to perform the appropriate switching procedures needed to remove both transformers from service. Once all associated equipment on the line and load side of each transformer were locked out, the UMS representatives then removed all primary and secondary bus work from the Generator No. 16 Step Up Transformer. When the UMS representatives removed the cover of the enclosed secondary (13,800 Volt) bus, the UMS representatives discovered evidence of water accumulation in the secondary bus compartment. It is recommended that the rubber gasket around the secondary compartment cover be replaced; other items requiring replacement where the door mounted "cage nuts" and the associated bolts and sealing washers. These items will provide a better weather seal to prevent water entry and accumulation in the future. The T.P.C.G. plant personnel were also informed of this situation and they assisted by having new gaskets made for the door units. The UMS representatives also discovered that the existing cubicle heaters in the 15 kV bus duct were mounted very far from the area where the rust accumulation was present. It is recommended that additional heaters be installed closer in proximity to the rust accumulation to further prevent any water/rust accumulation.

On the primary "H2" bushing, the UMS representatives discovered a chip that had been previously repaired with epoxy; however, the epoxy was discovered to be deteriorated. It is recommended that this bushing be considered for replacement in the near future.

The UMS representatives then completed the removal of all primary and secondary bus work prior to performing the following itemized electrical tests:

- Transformer DC Insulation Resistance Tests (with calculated polarization ratio)
- Transformer Power Factor and Capacitance Tests
- Primary Bushing C1 Power Factor and Capacitance Tests
- Transformer Winding Excitation Tests
- Leakage Reactance Tests (measured impedance)
- Primary Surge Arrester Watt Loss Tests
- Transformer Turns Ratio Tests
- Primary DC Winding Resistance Tests
- Secondary DC Winding Resistance Tests
- Primary Cable Power Factor and Capacitance Tests

All of the above listed test results were found to be satisfactory with the exception of the primary surge arrester watt lost test results and the transformer turns ratio test results. The primary surge arrester watt lost test results revealed the "H2" surge arrester had a slight

imbalance to the "H1" and "H3" surge arresters. The transformer turns ratio test results revealed that all three phases were balanced; however, deviated from the nameplate data on the "B" de-energized tap changer position. The passable limit 0.50% or less deviation percentage and the test results revealed a 0.67%-0.68% deviation; however, all three phases were very well balanced. This condition is probably due to inaccuracies in the original construction of the unit.

Upon completion of electrical testing of the Generator No. 16 Step Up Transformer, The UMS representatives left the secondary bushing connections disconnected to allow for electrical testing of the 13,800 volt bus because the Generator No. 16 Step Up and Generator No. 16 Auxiliary Power Transformer 13,800 volt bus work ties together in the bus duct to Generator No. 16. The UMS representatives then removed all covers for the bus connections for the Generator No. 16 Auxiliary Power Transformer and discovered further evidence of water accumulation in the primary (13,800 Volt) bus compartment. It is recommended that the rubber gasket around the primary compartment cover be replaced along with the "cage nuts" and associated bolts and washers in order to provide a better seal to prevent water accumulation in the future. The T.P.C.G. personnel were informed of this situation and also proceeded to have new gaskets made for this unit. The UMS representatives removed all bus connections from the Generator No 16 Auxiliary Power Transformer prior to performing the following itemized electrical tests:

- Transformer DC Insulation Resistance Tests
- Transformer Power Factor and Capacitance Tests
- Transformer Winding Excitation Tests
- Leakage Reactance Tests (Measured Impedance)
- Transformer Turns Ratio Tests
- Primary DC Winding Resistance Tests
- Secondary DC Winding Resistance Tests
- 13,800 Volt Bus DC Insulation Resistance Tests

All of the above listed test results were found to be satisfactory with the exception of the leakage reactance test results and the primary DC winding resistance test results. It is recommended that this unit be tested annually to help develop a trend to track the deterioration of this unit. The UMS representatives will return in the near future to install all cover plates that were sent off by T.P.C.G. for reconditioning with new gaskets.

DUSTY HOFFPAUIR / SENIOR FIELD TECHNICIAN
JONATHAN MURRAY / SENIOR FIELD TECHNICIAN

W.O. #94-035.249

OIL CIRCUIT BREAKER TEST & INSPECTION

UTILITY MAINTENANCE SPECIALISTS
UMS
NEW IBERIA, LA

4007 Vida Shaw Road
New Iberia, LA 70563
(337) 944-6152

WORK ORDER NO: 94-035.249
DATE: 11/15/17
TESTED BY: J. MURRAY/D. COURVILLE

CUSTOMER: TPCG ADDRESS: HOUMA, LA
LOCATION: STEAM PLANT SUBSTATION
EQUIPMENT DESCRIPTION: 34.5 kV WESTINGHOUSE TYPE 345G2500 "OCB NO. 16 GENERATOR"
PREVIOUS SERVICES:

BREAKER DATA

MANUF: WESTINGHOUSE TYPE: 345G2500
SERIAL NO: 1-37Y5964 TYPE OPER MECH: AA10-60G TYPE INTERRUPTER: MINERAL OIL
DATE/MANUF: 1975 RATED VOLTAGE/SYSTEM: 38 kV/34.5 kV
BIL: 200 kV KV: 34.5 AMPERAGE: 2000 SHORT CKT: 36 kA VOLTAGE FACT: 1.58
INT TIME: 5 CYCLES INST BOOK: 33-750-4 PARTS BOOK:
BUSHING DATA: SEE ATTACHED OMICRON TEST REPORT

INSPECTION

GENERAL CONDITION: TANK & LINERS: (1) BUSHINGS: DIRTY/CLEANED
INSULATING MEMBERS: GOOD OIL GAUGES/LEVEL: ALL 3 TANKS LOW OIL LEVELS
STRUCTURAL MEMBERS: GOOD OPERATING MECH: LUBRICATED
MAIN CONTACTS: (1) ARC GRIDS: (1) BUSHING CT'S: (1)
CONTACT SYNC (SLOW CLOSE): (1) LINKAGE: GOOD
TANK GASKETS: (1) COMPRESSOR OIL: GOOD COMPRESSOR BELT: GOOD/ SLT WEAR
HEATERS: FUNCTIONAL AUX CONTACT SWITCH: LUBRICATED GROUND CONN: GOOD
AIR LEAKS: YES (2) COUNTER RDG FND: 232 COUNTER RDG LFT: 243

TESTS

AS FND/AS LFT BUSH 1-2 = C Ø 3-4 = B Ø 5-6 = A Ø

OIL DIELECTRIC STRENGTH AØ = BØ = CØ =
INSULATION RES @ 5 kV AØ - GND = 1,117 MEGOHM BØ - GND = 879 MEGOHM CØ - GND = 35 MEGOHM
WITH CONTACTS CLOSED AØ - BØ = 2,300 MEGOHM BØ - CØ = 1,005 MEGOHM CØ-AØ= 1,182 MEGOHM
INSULATION RES @ 5 kV AØ = 6,620 MEGOHM BØ = 4,860 MEGOHM CØ = 16,310 MEGOHM
WITH CONTACTS OPEN
CONTACT RES(DUCTOR) @ 100 AMP AØ = 37 MICRO-OHM BØ = 35.7 MICRO-OHM CØ = 34.5 MICRO-OHM
CLOSING SPEED/OPENING SPEED: AS FND = AS LFT =

ADJUSTMENTS

DESCRIPTION	AS FOUND	AS LEFT	MANUFACTURER SPEC

REMARKS

1) UNABLE TO DROP TANKS TO VIEW THESE PARAMETERS.
2) AIR LEAK IN BOTTOM VALVE BALL SEAT. RECOMMEND REPLACEMENT.
3) ACTUATOR VALVE FOR COMPRESSOR FOUND TO BE FUNCTIONING INCORRECTLY. UMS MADE NECESSARY ADJUSTMENTS TO ACQUIRE CORRECT FUNCTIONALITY.
4) 46.13 PUMP UP TIME.

CAMLIN POWER

PROFILE RECORD

#0416 Device 0547 from 15 Nov 2017 0:15

Substation	Edison Street Substation
Breaker Identifier	OCB NO.16 GENERATOR
Breaker Type	345G2500 POWER CIRCUIT BREAKER
Operation	Close
Relay	
Tags	

Latch	4.6
Buffer	6.5
AuxCon	11.1
End	23.0
MCon	193.5 194.7 194.5
Vini	134.6
Vmin	131.2
Ipk1	4.5
Iplt	5.1

CAMLIN POWER

PROFILE RECORD

#0415 Device 0547 from 15 Nov 2017 0:06

Substation	Edison Street Substation
Breaker Identifier	OCB NO.16 GENERATOR
Breaker Type	345G2500 POWER CIRCUIT BREAKER
Operation	Trip
Relay	
Tags	

Latch			
Buffer	17.1		
AuxCon	63.6		
End	73.4		
MCon	47.3	47.3	46.9
Vini	134.4		
Vmin	129.5		
Ipk1	4.4		
Iplt	8.5		

Electrical Testing of the Generator No. 16 OCB Located at the Steam Plant

UTILITY MAINTENANCE SPECIALISTS
UMS
NEW IBERIA, LA

Client	Terrebonne Parish Consolidated Government	OCB No. 16 GEN	
Execution date	11/15/2017	Reason of the job	Routine
Tested by	J Murray / D Courville	Location	T.P.C.G. Power Plant
Approved by	Mac Clary	Asset	Circuit breaker
Report ID	1	Asset type	Dead tank oil breaker (OCB)
Report issue date	11/19/2017 5:55:24 PM	Asset serial number	1-37Y5964
Work order	94-035.249	Manufacturer	Westinghouse

Summary

Electrical Testing of the Generator No. 16 OCB Located at the Steam Plant. All Leads were disconnected, the Circuit Breaker was isolated, and all bushings were cleaned prior to performing any electrical tests on this unit

Power Factor and Capacitance Test Results reveal severe deterioration on Bushing No. 1. It is recommended that this unit be immediately removed from service.

Performed tests	Assessment
Circuit Breaker PF & CAP	Manual fail
Bushing PF & CAP - C1	Manual fail

Overall Assessment	Continued safe operation not possible

Tested by:

J Murray / D Courville

Approved by:

Mac Clary

Location & company information

Location	
Name	T.P.C.G. Power Plant
Region	Terrebonne Parish
Division	Southern USA
Area	Terrebonne Parish
Plant	T.P.C.G. Power Plant
Address	1551 Barrow St
City	Houma
State/Province	LA
Postal code	70360
Country	United States

Company	
Company	Utility Maintenance Specialists, Inc
Department	Apparatus Testing
Address	4007 Vida Shaw Road
City	New Iberia
State/Province	LA
Postal code	70563
Country	United Satates
Phone No.	337-944-6152
Fax No.	337-944-6154
E-mail	MClary@UMS-1.com

Geo coordinates	

Contact person	
Name	Mac Clary
Phone No. 1	337-944-6152
Phone No. 2	337-256-9118
Fax No.	337-944-6154
E-mail	mclary@ums-1.com

Comment

Dead tank oil breaker (OCB) nameplate data

Serial number	1-37Y5964
Manufacturer	Westinghouse
Manufacturing year	1975
Manufacturer type	345G2500
Asset system code	
Apparatus ID	OCB No. 16 GEN
Feeder	OCB No. 16 GEN
No. of phases	3

No. of interrupters p. phase	1
Pole operation	Ganged
Pre-insertion resistors	No
PIR value	Ω
Grading capacitors	No
Capacitor value	pF
Interrupting medium	Oil
Tank type	Dead tank

Comment

Ratings	
Rated frequency	60.00 Hz
Rated voltage L-L	38.0 kV
Rated current	2000.0 A
Rated SC breaking current	36.0 kA
Short-circuit nominal duration	s
Rated insul. level L-G (BIL)	200.0 kV
Rated interrupting time	12.0 ms
Interrupting duty cycle	5
Rated power at closing	W
Rated power at opening	W
Rated power at motor charge	W

Contact system	
Total travel	in
Damping time	ms

Others	
Total weight with oil	9600 lbs
Weight of oil	lbs
Volume of oil	336.0 gals

Pneumatic Operating mechanism nameplate data	
Serial No.	37Y5964-1
Manufacturer	Westinghouse
Manufacturer type	AA10-60G
Manufacturing year	1975
Asset system code	

Component	Rated voltage	Rated current	Frequency	
Trip coil 1	125.0 V	11.0 A	Hz	DC
Close coil 1	125.0 V	2.0 A	Hz	DC
Auxiliary circuits	V	A	Hz	DC
Motor	208.0 V	A	60.0 Hz	AC

Rated operating pressure	110.00 psi @ 20 °C

Bushings nameplate data

Pos.	Serial No.	Manufact.	Man. year	Voltage L-ground	Max. system voltage	Rated current	Insul. level LL
1	0004-75	Westinghouse	1975	33.5 kV	34.5 kV	2000.0 A	200 kV
2	0007-75	Westinghouse	1975	33.5 kV	34.5 kV	2000.0 A	200 kV
3	0003-75	Westinghouse	1975	33.5 kV	34.5 kV	2000.0 A	200 kV
4	0005-75	Westinghouse	1975	33.5 kV	34.5 kV	2000.0 A	200 kV
5	0002-75	Westinghouse	1975	33.5 kV	34.5 kV	2000.0 A	200 kV
6	0006-75	Westinghouse	1975	33.5 kV	34.5 kV	2000.0 A	200 kV

Pos.	Cap. (C1)	PF (C1)	Cap. (C2)	PF (C2)	Insulation type	Tap type
1	pF	%	pF	%	Oil-impregnated paper	With test tap

Pos.	Cap. (C1)	PF (C1)	Cap. (C2)	PF (C2)	Insulation type	Tap type
2	pF	%	pF	%	Oil-impregnated paper	With test tap
3	pF	%	pF	%	Oil-impregnated paper	With test tap
4	pF	%	pF	%	Oil-impregnated paper	With test tap
5	pF	%	pF	%	Oil-impregnated paper	With test tap
6	pF	%	pF	%	Oil-impregnated paper	With test tap

Test set information

Model	Serial number	Calibration date
CPC100	NC373T	04/27/2015 13:34:29
CP TD1	KC344R	None

Global test conditions

Weather	Partly cloudy	Humidity	53 %
Unit location	Outside	Ambient temperature	25 °C

Operations counter

Counter reading found	232
Counter reading left	243

Circuit Breaker PF & CAP

Ambient temperature	25 °C	Weather	Partly cloudy
		Humidity	53 %

Comments

The Circuit Breaker Power Factor and Capacitance Test Results revealed the Bushing No. 1 has significant deterioration in the insulation. It is recommended that this unit immediately be removed from service and repaired or replaced.

Standard test

Corr. factor	0.83
* Reference voltage	10.0 kV

Meas.	Position	Test mode	Freq.	V out	* I out	* Watt losses	PF meas	PF corr	Cap. meas	Assessment
C1G	Open	GST	60.00 Hz	10.00 kV	1.62 mA	3024.07 mW	18.6270 %	15.4604 %	420.2 pF	Man. fail
C2G	Open	GST	60.00 Hz	10.00 kV	1.41 mA	733.84 mW	5.2206 %	4.3331 %	369.4 pF	Man. inv.
C3G	Open	GST	60.00 Hz	10.00 kV	1.46 mA	1022.17 mW	7.0055 %	5.8145 %	383.1 pF	Man. inv.
C4G	Open	GST	60.00 Hz	10.00 kV	1.41 mA	650.20 mW	4.6125 %	3.8284 %	370.5 pF	Man. inv.
C5G	Open	GST	60.00 Hz	10.00 kV	1.44 mA	879.52 mW	6.1166 %	5.0768 %	377.7 pF	Man. inv.
C6G	Open	GST	60.00 Hz	10.00 kV	1.36 mA	667.63 mW	4.9158 %	4.0801 %	356.8 pF	Man. inv.
C1G+C2G	Closed	GST	60.00 Hz	10.00 kV	2.93 mA	3584.61 mW	12.2225 %	10.1447 %	769.2 pF	Man. fail
C3G+C4G	Closed	GST	60.00 Hz	10.00 kV	2.77 mA	1654.78 mW	5.9649 %	4.9509 %	731.6 pF	Man. inv.
C5G+C6G	Closed	GST	60.00 Hz	10.00 kV	2.70 mA	1517.20 mW	5.6128 %	4.6586 %	712.9 pF	Man. inv.

Phase	Tank loss index	Assessment
A	-0.17	Man. fail
B	-0.02	Man. inv.
C	-0.03	Man. inv.

Frequency sweep

Measurement: C1G

Corr. factor			0.83
* Reference voltage			10.0 kV
No.	1b	Test mode	GST

Freq.	V test	V out	* I out	* Watt losses	PF meas	PF corr	Cap. meas	Assessment
15.00 Hz	2.00 kV	2.00 kV	0.46 mA	1555.02 mW	33.6398 %	27.9210 %	459.2 pF	Man. fail
30.00 Hz	2.00 kV	2.02 kV	0.85 mA	1993.33 mW	23.4561 %	19.4686 %	435.4 pF	Man. fail
45.00 Hz	2.00 kV	2.02 kV	1.23 mA	2368.98 mW	19.2258 %	15.9574 %	424.8 pF	Man. fail
60.00 Hz	2.00 kV	2.02 kV	1.61 mA	2668.91 mW	16.5602 %	13.7450 %	418.6 pF	Man. fail
145.00 Hz	2.00 kV	2.02 kV	3.71 mA	4215.29 mW	11.3502 %	9.4206 %	402.0 pF	Man. fail
230.00 Hz	2.00 kV	2.02 kV	5.78 mA	5087.65 mW	8.7961 %	7.3008 %	395.7 pF	Man. fail
315.00 Hz	2.00 kV	2.02 kV	7.83 mA	5923.50 mW	7.5605 %	6.2752 %	391.6 pF	Man. fail
400.00 Hz	2.00 kV	2.02 kV	9.88 mA	6564.22 mW	6.6471 %	5.5171 %	389.1 pF	Man. fail

Measurement: C2G

Corr. factor			0.83
* Reference voltage			10.0 kV
No.	2b	Test mode	GST

Freq.	V test	V out	* I out	* Watt losses	PF meas	PF corr	Cap. meas	Assessment
15.00 Hz	2.00 kV	2.00 kV	0.37 mA	427.21 mW	11.5896 %	9.6193 %	385.5 pF	Man. inv.
30.00 Hz	2.00 kV	2.02 kV	0.72 mA	643.10 mW	8.9719 %	7.4467 %	375.7 pF	Man. inv.
45.00 Hz	2.00 kV	2.02 kV	1.06 mA	820.97 mW	7.7276 %	6.4139 %	371.6 pF	Man. inv.
60.00 Hz	2.00 kV	2.02 kV	1.41 mA	902.69 mW	6.4232 %	5.3312 %	369.1 pF	Man. inv.
145.00 Hz	2.00 kV	2.02 kV	3.34 mA	1424.76 mW	4.2680 %	3.5425 %	363.1 pF	Man. inv.
230.00 Hz	2.00 kV	2.01 kV	5.26 mA	1955.42 mW	3.7184 %	3.0863 %	360.7 pF	Man. inv.
315.00 Hz	2.00 kV	2.02 kV	7.17 mA	2553.36 mW	3.5598 %	2.9546 %	359.1 pF	Man. inv.
400.00 Hz	2.00 kV	2.02 kV	9.08 mA	3074.56 mW	3.3862 %	2.8106 %	358.1 pF	Man. inv.

Measurement: C3G

Corr. factor			0.83
* Reference voltage			10.0 kV
No.	3b	Test mode	GST

Freq.	V test	V out	* I out	* Watt losses	PF meas	PF corr	Cap. meas	Assessment
15.00 Hz	2.00 kV	2.00 kV	0.39 mA	626.01 mW	16.0660 %	13.3348 %	405.1 pF	Man. inv.
30.00 Hz	2.00 kV	2.02 kV	0.75 mA	788.04 mW	10.5340 %	8.7432 %	391.7 pF	Man. inv.
45.00 Hz	2.00 kV	2.02 kV	1.10 mA	912.75 mW	8.2649 %	6.8599 %	386.3 pF	Man. inv.
60.00 Hz	2.00 kV	2.02 kV	1.46 mA	1023.34 mW	7.0125 %	5.8204 %	383.1 pF	Man. inv.
145.00 Hz	2.00 kV	2.02 kV	3.45 mA	1510.78 mW	4.3756 %	3.6318 %	375.7 pF	Man. inv.
230.00 Hz	2.00 kV	2.01 kV	5.43 mA	1917.15 mW	3.5296 %	2.9295 %	372.7 pF	Man. inv.
315.00 Hz	2.00 kV	2.02 kV	7.41 mA	2287.43 mW	3.0886 %	2.5636 %	371.0 pF	Man. inv.
400.00 Hz	2.00 kV	2.02 kV	9.37 mA	2632.52 mW	2.8090 %	2.3315 %	369.7 pF	Man. inv.

Measurement: C4G

Corr. factor			0.83
* Reference voltage			10.0 kV
No.	4b	Test mode	GST

Freq.	V test	V out	* I out	* Watt losses	PF meas	PF corr	Cap. meas	Assessment
15.00 Hz	2.00 kV	2.02 kV	0.37 mA	385.38 mW	10.5104 %	8.7236 %	383.9 pF	Man. inv.
30.00 Hz	2.00 kV	2.02 kV	0.72 mA	489.55 mW	6.8364 %	5.6742 %	375.9 pF	Man. inv.
45.00 Hz	2.00 kV	2.02 kV	1.06 mA	573.96 mW	5.3977 %	4.4801 %	372.5 pF	Man. inv.
60.00 Hz	2.00 kV	2.02 kV	1.41 mA	651.10 mW	4.6195 %	3.8342 %	370.5 pF	Man. inv.
145.00 Hz	2.00 kV	2.01 kV	3.36 mA	1012.51 mW	3.0140 %	2.5016 %	365.5 pF	Man. inv.
230.00 Hz	2.00 kV	2.02 kV	5.30 mA	1328.62 mW	2.5085 %	2.0821 %	363.3 pF	Man. inv.
315.00 Hz	2.00 kV	2.02 kV	7.23 mA	1624.15 mW	2.2475 %	1.8654 %	362.0 pF	Man. inv.
400.00 Hz	2.00 kV	2.02 kV	9.15 mA	1904.81 mW	2.0808 %	1.7271 %	361.1 pF	Man. inv.

Measurement: C5G

Corr. factor			0.83
* Reference voltage			10.0 kV
No.	5b	Test mode	GST

Freq.	V test	V out	* I out	* Watt losses	PF meas	PF corr	Cap. meas	Assessment
15.00 Hz	2.00 kV	2.00 kV	0.38 mA	535.18 mW	14.0709 %	11.6789 %	396.6 pF	Man. inv.
30.00 Hz	2.00 kV	2.02 kV	0.73 mA	674.99 mW	9.1883 %	7.6263 %	385.1 pF	Man. inv.
45.00 Hz	2.00 kV	2.02 kV	1.09 mA	783.38 mW	7.2071 %	5.9819 %	380.4 pF	Man. inv.
60.00 Hz	2.00 kV	2.01 kV	1.44 mA	879.86 mW	6.1180 %	5.0779 %	377.7 pF	Man. inv.
145.00 Hz	2.00 kV	2.01 kV	3.41 mA	1310.90 mW	3.8410 %	3.1880 %	371.3 pF	Man. inv.
230.00 Hz	2.00 kV	2.01 kV	5.37 mA	1674.89 mW	3.1167 %	2.5869 %	368.7 pF	Man. inv.
315.00 Hz	2.00 kV	2.02 kV	7.33 mA	2007.87 mW	2.7405 %	2.2746 %	367.1 pF	Man. inv.
400.00 Hz	2.00 kV	2.02 kV	9.28 mA	2321.34 mW	2.5024 %	2.0770 %	366.0 pF	Man. inv.

Measurement: C6G

Corr. factor			0.83
* Reference voltage			10.0 kV
No.	6b	Test mode	GST

Freq.	V test	V out	* I out	* Watt losses	PF meas	PF corr	Cap. meas	Assessment
15.00 Hz	2.00 kV	2.00 kV	0.35 mA	382.75 mW	10.7957 %	8.9604 %	371.0 pF	Man. inv.
30.00 Hz	2.00 kV	2.02 kV	0.69 mA	495.07 mW	7.1639 %	5.9460 %	362.7 pF	Man. inv.
45.00 Hz	2.00 kV	2.02 kV	1.03 mA	586.00 mW	5.7157 %	4.7440 %	359.0 pF	Man. inv.
60.00 Hz	2.00 kV	2.01 kV	1.36 mA	668.38 mW	4.9202 %	4.0838 %	356.8 pF	Man. inv.
145.00 Hz	2.00 kV	2.01 kV	3.23 mA	1047.03 mW	3.2408 %	2.6898 %	351.4 pF	Man. inv.
230.00 Hz	2.00 kV	2.01 kV	5.09 mA	1371.02 mW	2.6928 %	2.2350 %	349.2 pF	Man. inv.
315.00 Hz	2.00 kV	2.02 kV	6.94 mA	1669.64 mW	2.4045 %	1.9958 %	347.8 pF	Man. inv.
400.00 Hz	2.00 kV	2.02 kV	8.79 mA	1951.53 mW	2.2190 %	1.8418 %	346.8 pF	Man. inv.

Measurement: C1G+C2G

Corr. factor			0.83
* Reference voltage			10.0 kV
No.	7b	Test mode	GST

Freq.	V test	V out	* I out	* Watt losses	PF meas	PF corr	Cap. meas	Assessment
15.00 Hz	2.00 kV	2.01 kV	0.81 mA	2104.00 mW	25.9863 %	21.5686 %	826.8 pF	Man. fail
30.00 Hz	2.00 kV	2.02 kV	1.52 mA	2568.03 mW	16.8629 %	13.9962 %	793.5 pF	Man. fail
45.00 Hz	2.00 kV	2.02 kV	2.23 mA	2956.68 mW	13.2590 %	11.0050 %	778.7 pF	Man. fail
60.00 Hz	2.00 kV	2.02 kV	2.93 mA	3308.49 mW	11.2874 %	9.3686 %	769.6 pF	Man. fail
145.00 Hz	2.00 kV	2.02 kV	6.85 mA	4872.79 mW	7.1162 %	5.9065 %	746.6 pF	Man. fail
230.00 Hz	2.00 kV	2.01 kV	10.71 mA	6124.59 mW	5.7173 %	4.7454 %	737.2 pF	Man. fail
315.00 Hz	2.00 kV	2.02 kV	14.56 mA	7221.41 mW	4.9607 %	4.1173 %	731.6 pF	Man. fail
400.00 Hz	2.00 kV	2.02 kV	18.38 mA	8226.84 mW	4.4754 %	3.7145 %	727.8 pF	Man. fail

Measurement: C3G+C4G

Corr. factor			0.83
* Reference voltage			10.0 kV
No.	8b	Test mode	GST

Freq.	V test	V out	* I out	* Watt losses	PF meas	PF corr	Cap. meas	Assessment
15.00 Hz	2.00 kV	2.00 kV	0.73 mA	1017.71 mW	13.8965 %	11.5341 %	766.5 pF	Man. inv.
30.00 Hz	2.00 kV	2.02 kV	1.42 mA	1275.94 mW	9.0109 %	7.4790 %	745.3 pF	Man. inv.
45.00 Hz	2.00 kV	2.02 kV	2.10 mA	1477.11 mW	7.0452 %	5.8475 %	736.6 pF	Man. inv.
60.00 Hz	2.00 kV	2.02 kV	2.77 mA	1655.69 mW	5.9683 %	4.9537 %	731.6 pF	Man. inv.
145.00 Hz	2.00 kV	2.02 kV	6.59 mA	2452.84 mW	3.7237 %	3.0907 %	719.5 pF	Man. inv.
230.00 Hz	2.00 kV	2.01 kV	10.38 mA	3124.21 mW	3.0105 %	2.4987 %	714.7 pF	Man. inv.
315.00 Hz	2.00 kV	2.02 kV	14.16 mA	3740.73 mW	2.6426 %	2.1933 %	711.9 pF	Man. inv.
400.00 Hz	2.00 kV	2.02 kV	17.92 mA	4324.35 mW	2.4128 %	2.0026 %	709.8 pF	Man. inv.

Measurement: C5G+C6G

Corr. factor			0.83
* Reference voltage			10.0 kV
No.	9b	Test mode	GST

Freq.	V test	V out	* I out	* Watt losses	PF meas	PF corr	Cap. meas	Assessment
15.00 Hz	2.00 kV	2.01 kV	0.71 mA	912.98 mW	12.8389 %	10.6563 %	745.4 pF	Man. inv.
30.00 Hz	2.00 kV	2.02 kV	1.38 mA	1156.66 mW	8.3904 %	6.9640 %	725.8 pF	Man. inv.
45.00 Hz	2.00 kV	2.02 kV	2.04 mA	1347.23 mW	6.5961 %	5.4747 %	717.6 pF	Man. inv.
60.00 Hz	2.00 kV	2.02 kV	2.70 mA	1516.27 mW	5.6098 %	4.6561 %	712.9 pF	Man. inv.
145.00 Hz	2.00 kV	2.02 kV	6.42 mA	2274.65 mW	3.5416 %	2.9396 %	701.5 pF	Man. inv.
230.00 Hz	2.00 kV	2.02 kV	10.12 mA	2912.98 mW	2.8783 %	2.3890 %	697.0 pF	Man. inv.
315.00 Hz	2.00 kV	2.02 kV	13.80 mA	3498.50 mW	2.5348 %	2.1039 %	694.2 pF	Man. inv.
400.00 Hz	2.00 kV	2.02 kV	17.48 mA	4054.35 mW	2.3199 %	1.9255 %	692.3 pF	Man. inv.

Graphs for standard test

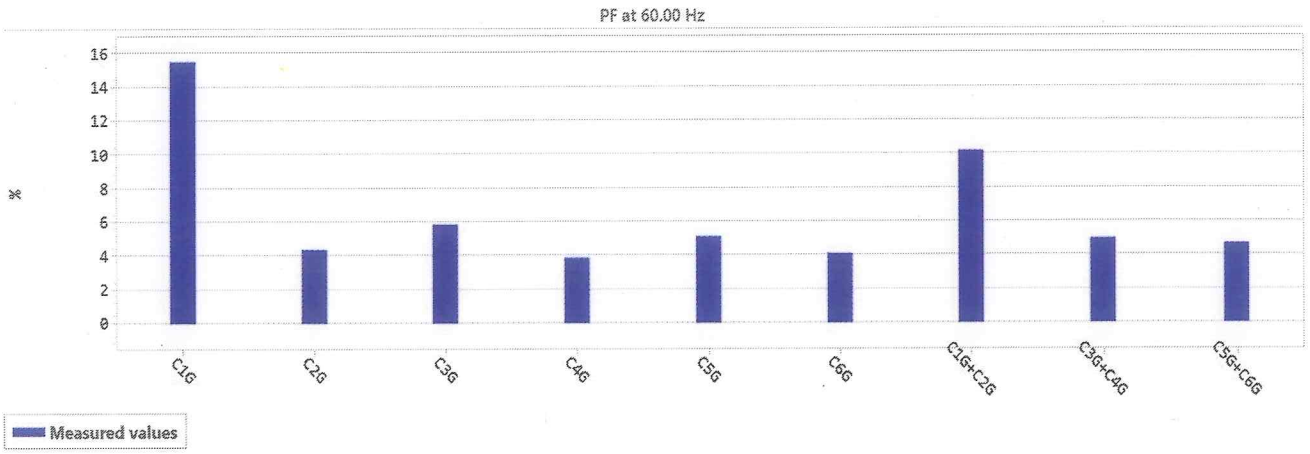

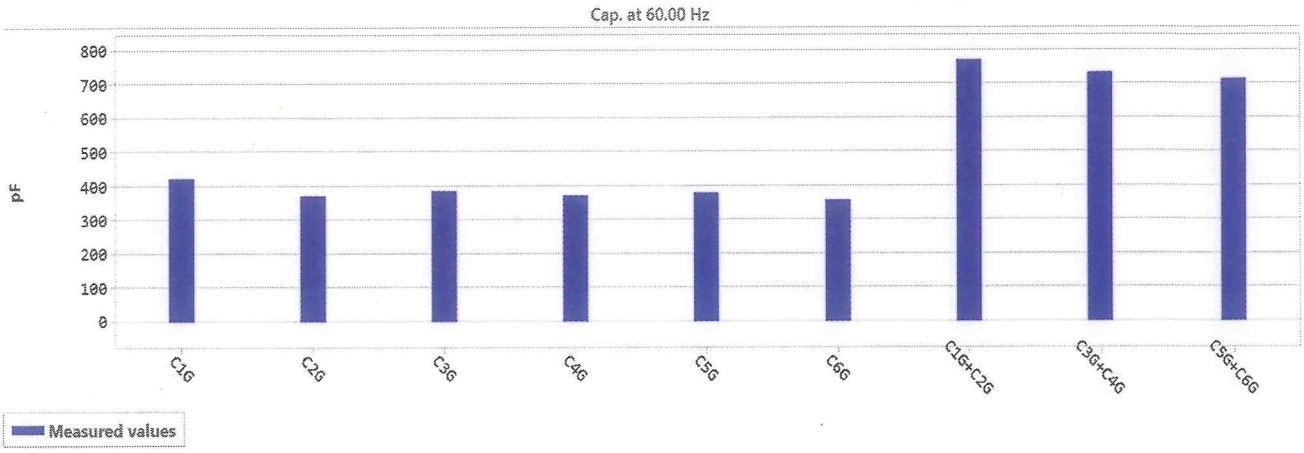

Graphs for frequency sweep

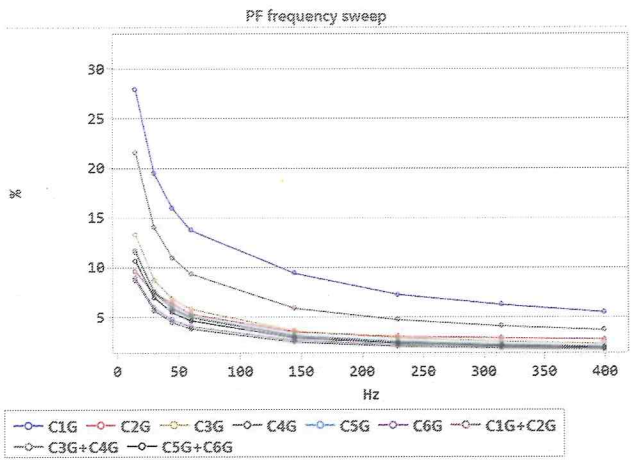

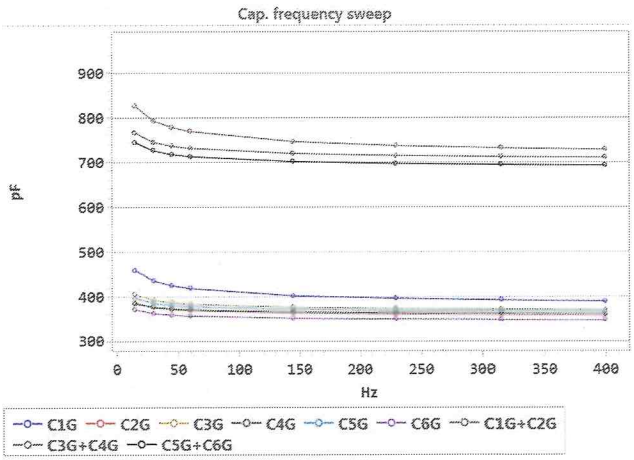

Bushing PF & CAP - C1

Ambient temperature	25 °C	Weather	Partly cloudy
		Humidity	53 %

Comments

The Bushing Power Factor and Capacitance Test Results revealed significant deterioration in Bushing No. 1. It is recommended that this unit be immediately removed from service and replace bushing No. 1.

Standard test

Corr. factor	0.89
* Reference voltage	10.0 kV

No.	Meas.	Test mode	Freq.	V out	* I out	* Watt losses	PF meas	PF corr	Cap. meas	Assessment
1a	Bushing 1	UST-A	60.00 Hz	10.00 kV	1.30 mA	2911.95 mW	22.4488 %	19.9794 %	335.3 pF	Man. fail
2a	Bushing 2	UST-A	60.00 Hz	10.00 kV	1.07 mA	716.06 mW	6.7026 %	5.9653 %	282.8 pF	Man. inv.
3a	Bushing 3	UST-A	60.00 Hz	10.00 kV	1.11 mA	1005.18 mW	9.0165 %	8.0247 %	294.5 pF	Man. inv.
4a	Bushing 4	UST-A	60.00 Hz	10.00 kV	1.07 mA	617.11 mW	5.7813 %	5.1453 %	282.7 pF	Man. inv.
5a	Bushing 5	UST-A	60.00 Hz	10.00 kV	1.09 mA	866.86 mW	7.9390 %	7.0657 %	288.7 pF	Man. inv.
6a	Bushing 6	UST-A	60.00 Hz	10.00 kV	1.01 mA	631.97 mW	6.2321 %	5.5465 %	268.5 pF	Man. inv.

Frequency sweep

Measurement: Bushing 1

Corr. factor	0.89
* Reference voltage	10.0 kV

No.	1b	Test mode	UST-A

Freq.	V test	V out	* I out	* Watt losses	PF meas	PF corr	Cap. meas	Assessment
15.00 Hz	2.00 kV	2.02 kV	0.40 mA	1763.62 mW	44.4695 %	39.5779 %	376.9 pF	Man. fail
30.00 Hz	2.00 kV	2.02 kV	0.69 mA	2028.52 mW	29.2125 %	25.9991 %	352.3 pF	Man. fail
45.00 Hz	2.00 kV	2.02 kV	0.99 mA	2327.63 mW	23.4213 %	20.8450 %	341.6 pF	Man. fail
60.00 Hz	2.00 kV	2.02 kV	1.29 mA	2590.60 mW	20.0762 %	17.8678 %	335.4 pF	Man. fail
145.00 Hz	2.00 kV	2.02 kV	2.92 mA	3761.35 mW	12.8661 %	11.4509 %	318.3 pF	Man. fail
230.00 Hz	2.00 kV	2.01 kV	4.52 mA	4687.19 mW	10.3651 %	9.2249 %	311.2 pF	Man. fail
315.00 Hz	2.00 kV	2.02 kV	6.10 mA	5468.21 mW	8.9584 %	7.9730 %	307.1 pF	Man. fail
400.00 Hz	2.00 kV	2.02 kV	7.67 mA	6165.00 mW	8.0331 %	7.1495 %	304.3 pF	Man. fail

Measurement: Bushing 2

Corr. factor	0.89
* Reference voltage	10.0 kV

No.	2b	Test mode	UST-A

Freq.	V test	V out	* I out	* Watt losses	PF meas	PF corr	Cap. meas	Assessment
15.00 Hz	2.00 kV	2.02 kV	0.28 mA	427.98 mW	15.0318 %	13.3783 %	298.7 pF	Man. inv.
30.00 Hz	2.00 kV	2.02 kV	0.55 mA	639.63 mW	11.6731 %	10.3891 %	288.8 pF	Man. inv.
45.00 Hz	2.00 kV	2.02 kV	0.81 mA	771.36 mW	9.5366 %	8.4876 %	284.8 pF	Man. inv.
60.00 Hz	2.00 kV	2.02 kV	1.07 mA	898.31 mW	8.4048 %	7.4803 %	282.5 pF	Man. inv.

Freq.	V test	V out	* I out	* Watt losses	PF meas	PF corr	Cap. meas	Assessment
145.00 Hz	2.00 kV	2.02 kV	2.53 mA	1426.02 mW	5.6411 %	5.0206 %	277.0 pF	Man. inv.
230.00 Hz	2.00 kV	2.02 kV	3.98 mA	1919.35 mW	4.8259 %	4.2950 %	274.9 pF	Man. inv.
315.00 Hz	2.00 kV	2.02 kV	5.42 mA	2301.77 mW	4.2482 %	3.7809 %	273.5 pF	Man. inv.
400.00 Hz	2.00 kV	2.02 kV	6.86 mA	2592.64 mW	3.7821 %	3.3660 %	272.6 pF	Man. inv.

Measurement: Bushing 3

Corr. factor		0.89	
* Reference voltage		10.0 kV	
No.	3b	Test mode	UST-A

Freq.	V test	V out	* I out	* Watt losses	PF meas	PF corr	Cap. meas	Assessment
15.00 Hz	2.00 kV	2.00 kV	0.30 mA	629.70 mW	20.6531 %	18.3813 %	316.5 pF	Man. inv.
30.00 Hz	2.00 kV	2.02 kV	0.58 mA	787.00 mW	13.6484 %	12.1471 %	303.0 pF	Man. inv.
45.00 Hz	2.00 kV	2.02 kV	0.85 mA	907.57 mW	10.7261 %	9.5462 %	297.6 pF	Man. inv.
60.00 Hz	2.00 kV	2.02 kV	1.11 mA	1010.06 mW	9.0622 %	8.0653 %	294.5 pF	Man. inv.
145.00 Hz	2.00 kV	2.01 kV	2.62 mA	1465.29 mW	5.5846 %	4.9703 %	287.5 pF	Man. inv.
230.00 Hz	2.00 kV	2.02 kV	4.12 mA	1814.67 mW	4.4050 %	3.9204 %	284.8 pF	Man. inv.
315.00 Hz	2.00 kV	2.01 kV	5.61 mA	2157.85 mW	3.8452 %	3.4222 %	283.3 pF	Man. inv.
400.00 Hz	2.00 kV	2.02 kV	7.10 mA	2459.41 mW	3.4664 %	3.0851 %	282.2 pF	Man. inv.

Measurement: Bushing 4

Corr. factor		0.89	
* Reference voltage		10.0 kV	
No.	4b	Test mode	UST-A

Freq.	V test	V out	* I out	* Watt losses	PF meas	PF corr	Cap. meas	Assessment
15.00 Hz	2.00 kV	2.00 kV	0.28 mA	380.87 mW	13.5481 %	12.0578 %	295.5 pF	Man. inv.
30.00 Hz	2.00 kV	2.02 kV	0.54 mA	476.00 mW	8.7419 %	7.7803 %	287.7 pF	Man. inv.
45.00 Hz	2.00 kV	2.02 kV	0.81 mA	550.65 mW	6.8273 %	6.0763 %	284.5 pF	Man. inv.
60.00 Hz	2.00 kV	2.01 kV	1.07 mA	617.33 mW	5.7826 %	5.1465 %	282.7 pF	Man. inv.
145.00 Hz	2.00 kV	2.02 kV	2.54 mA	916.96 mW	3.6164 %	3.2186 %	278.2 pF	Man. inv.
230.00 Hz	2.00 kV	2.01 kV	4.00 mA	1173.80 mW	2.9369 %	2.6139 %	276.4 pF	Man. inv.
315.00 Hz	2.00 kV	2.02 kV	5.45 mA	1410.95 mW	2.5887 %	2.3039 %	275.3 pF	Man. inv.
400.00 Hz	2.00 kV	2.02 kV	6.90 mA	1637.62 mW	2.3731 %	2.1121 %	274.5 pF	Man. inv.

Measurement: Bushing 5

Corr. factor		0.89	
* Reference voltage		10.0 kV	
No.	5b	Test mode	UST-A

Freq.	V test	V out	* I out	* Watt losses	PF meas	PF corr	Cap. meas	Assessment
15.00 Hz	2.00 kV	2.00 kV	0.29 mA	539.89 mW	18.3406 %	16.3232 %	307.1 pF	Man. inv.
30.00 Hz	2.00 kV	2.02 kV	0.56 mA	701.09 mW	12.4833 %	11.1102 %	295.6 pF	Man. inv.
45.00 Hz	2.00 kV	2.02 kV	0.83 mA	813.66 mW	9.8341 %	8.7523 %	291.2 pF	Man. inv.
60.00 Hz	2.00 kV	2.01 kV	1.09 mA	929.61 mW	8.5134 %	7.5769 %	288.5 pF	Man. inv.
145.00 Hz	2.00 kV	2.01 kV	2.58 mA	1452.21 mW	5.6285 %	5.0094 %	282.7 pF	Man. inv.
230.00 Hz	2.00 kV	2.01 kV	4.06 mA	1835.92 mW	4.5244 %	4.0267 %	280.5 pF	Man. inv.
315.00 Hz	2.00 kV	2.02 kV	5.53 mA	2138.76 mW	3.8686 %	3.4430 %	279.2 pF	Man. inv.
400.00 Hz	2.00 kV	2.02 kV	7.00 mA	2546.13 mW	3.6376 %	3.2375 %	278.3 pF	Man. inv.

Measurement: Bushing 6

Corr. factor			0.89
* Reference voltage			10.0 kV
No.	6b	Test mode	UST-A

Freq.	V test	V out	* I out	* Watt losses	PF meas	PF corr	Cap. meas	Assessment
15.00 Hz	2.00 kV	2.00 kV	0.27 mA	376.39 mW	14.0178 %	12.4759 %	282.1 pF	Man. inv.
30.00 Hz	2.00 kV	2.02 kV	0.52 mA	479.24 mW	9.2435 %	8.2268 %	273.9 pF	Man. inv.
45.00 Hz	2.00 kV	2.01 kV	0.77 mA	560.35 mW	7.3056 %	6.5020 %	270.5 pF	Man. inv.
60.00 Hz	2.00 kV	2.02 kV	1.01 mA	631.89 mW	6.2324 %	5.5468 %	268.5 pF	Man. inv.
145.00 Hz	2.00 kV	2.01 kV	2.40 mA	951.95 mW	3.9605 %	3.5248 %	263.6 pF	Man. inv.
230.00 Hz	2.00 kV	2.02 kV	3.78 mA	1219.96 mW	3.2243 %	2.8696 %	261.7 pF	Man. inv.
315.00 Hz	2.00 kV	2.01 kV	5.16 mA	1466.12 mW	2.8416 %	2.5290 %	260.5 pF	Man. inv.
400.00 Hz	2.00 kV	2.02 kV	6.53 mA	1699.37 mW	2.6023 %	2.3160 %	259.7 pF	Man. inv.

Graphs for standard test

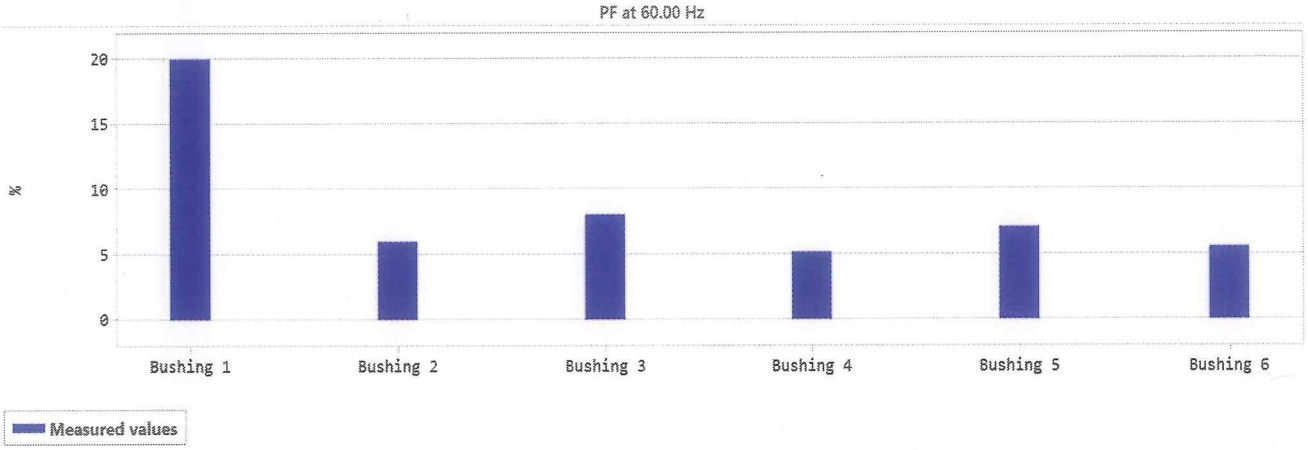

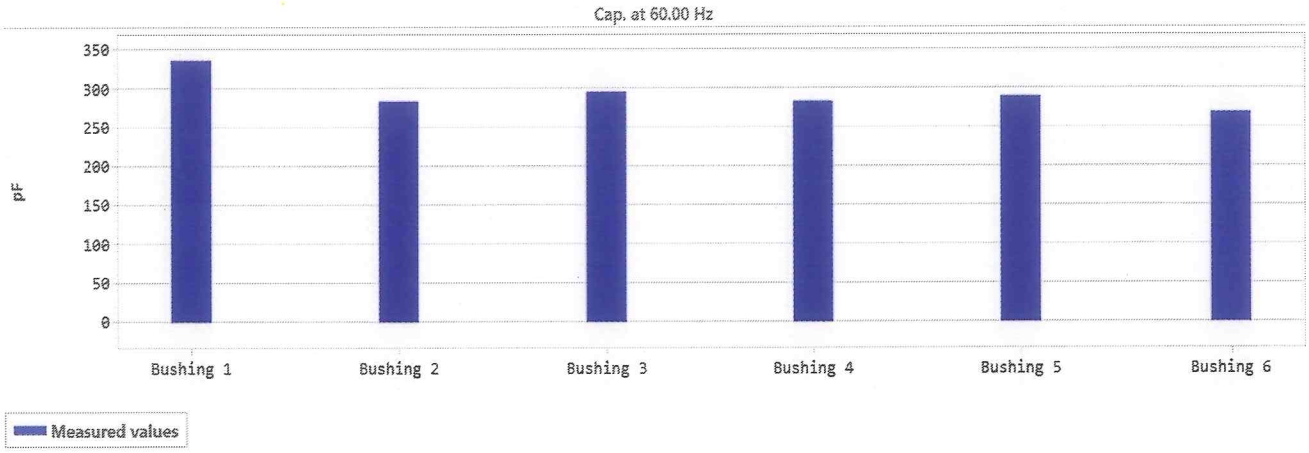

Graphs for frequency sweep

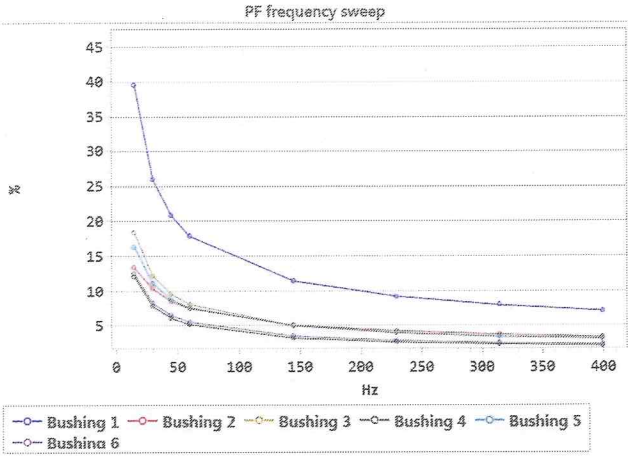

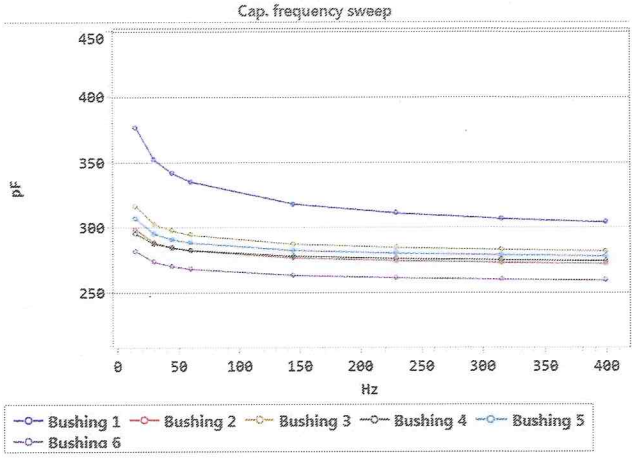

Category Number:
Item Number: 5.

Monday, November 27, 2017

Item Title:
Create a No Parking Zone along a portion of Brittany Street, Houma

Item Summary:
Resolution giving notice of intent to adopt an Ordinance to create a No Parking Zone along Brittany Street on the south side, approximately 170', from Howard Avenue and on the north side, approximately 91', from Howard Avenue and ending at the intersection of Brittany Street and Saint Malo Street, and to provide for the installation of said signs and to address other matters relative thereto.

ATTACHMENTS:

Description	Upload Date	Type
Executive Summary	11/21/2017	Executive Summary
Resolution	11/21/2017	Resolution
Ordinance	11/21/2017	Ordinance
Map of Area	11/21/2017	Backup Material

EXECUTIVE SUMMARY

(REQUIRED FOR ALL SUBMISSIONS)

PROJECT TITLE
Proposed No Parking Zone along a portion of Brittany Street, Houma.

PROJECT SUMMARY (200 WORDS OR LESS)
Resolution and Ordinance to create a No Parking Zone along Brittany Street on the south side, approximately 170', from Howard Avenue and on the north side, approximately 91', from Howard Avenue and ending at the intersection of Brittany Street and Saint Malo Street.

PROJECT PURPOSE & BENEFITS (150 WORDS OR LESS)
Resolution and Ordinance to create a No Parking Zone along Brittany Street on the south side, approximately 170', from Howard Avenue and on the north side, approximately 91', from Howard Avenue and ending at the intersection of Brittany Street and Saint Malo Street and to provide for the installation of said signs. Public hearing to be called on said matter on December 13, 2017.

TOTAL EXPENDITURE				
N/A				
AMOUNT SHOWN ABOVE IS: (CIRCLE ONE)				
ACTUAL – N/A			ESTIMATED	
IS PROJECTALREADY BUDGETED: (CIRCLE ONE)				
N/A	NO	YES	IF YES AMOUNT BUDGETED:	

COUNCIL DISTRICT(S) IMPACTED (CIRCLE ONE)									
PARISHWIDE	1	2	3	4	5	6	7	8	9

Signature

11/21/17
Date

OFFERED BY:
SECONDED BY:

RESOLUTION NO.

A RESOLUTION GIVING NOTICE OF INTENT TO ADOPT AN ORDINANCE TO CREATE A NO PARKING ZONE ALONG BRITTANY STREET ON THE SOUTH SIDE, APPROXIMATELY 170', FROM HOWARD AVENUE AND ON THE NORTH SIDE, APPROXIMATELY 91', FROM HOWARD AVENUE AND ENDING AT THE INTERSECTION OF BRITTANY STREET AND SAINT MALO STREET. AND TO PROVIDE FOR THE INSTALLATION OF SAID SIGNS AND TO ADDRESS OTHER MATTERS RELATIVE THERETO.

THEREFORE, BE IT RESOLVED by the Terrebonne Parish Council (Public Service Committee), on behalf of the Terrebonne Parish Consolidated Government, that Notice of Intent is given for adopting an Ordinance to create a No Parking Zone along Brittany Street on the south side, approximately 170', from Howard Avenue and on the north side, approximately 91', from Howard Avenue and ending at the intersection of Brittany Street and Saint Malo Street, and to provide for the installation of said signs and,

BE IT FURTHER RESOLVED that a public hearing on said ordinance be called for Wednesday, December 13, 2017 at 6:30 p.m.

OFFERED BY:
SECONDED BY:

ORDINANCE NO.

AN ORDINANCE AMENDING THE PARISH CODE OF TERREBONNE PARISH, CHAPTER 18. MOTOR VEHICLES AND TRAFFIC, ARTICLE V. STOPPING, STANDING AND PARKING, DIVISION 1. GENERAL, SECTION 18-223 TO ESTABLISH A "NO PARKING ZONE" ON BRITTANY STREET ALONG ON THE SOUTH SIDE, APPROXIMATELY 170', FROM HOWARD AVENUE AND ON THE NORTH SIDE, APPROXIMATELY 91', FROM HOWARD AVENUE AND ENDING AT THE INTERSECTION OF BRITTANY STREET AND SAINT MALO STREET AND TO AUTHORIZE THE INSTALLATION OF SAID SIGNS, AND TO ADDRESS OTHER MATTERS RELATIVE THERETO.

SECTION I

BE IT ORDAINED by the Terrebonne Parish Council, in regular session convened, acting pursuant to the authority invested in it by the Constitution and laws of the State of Louisiana, the Home Rule Charter for a Consolidated Government for Terrebonne Parish, and including, but not limited to, LSA R.S. 33:1368 and other statutes of the State of Louisiana, to amend the Parish Code of Terrebonne Parish, Chapter 18, Article V, Division 1, Section 18-223 to create a "No Parking Zone" on Brittany Street on the south side, approximately 170', from Howard Avenue and on the north side, approximately 91', from Howard Avenue and ending at the intersection of Brittany Street and Saint Malo Street and to authorize the installation of said signs.

CHAPTER 18, Motor Vehicles and Traffic

ARTICLE V, Stopping, Standing and Parking

DIVISION I, General

SECTION 18-223, "NO PARKING ZONES"

(a) ADD TO EXISTING LIST OF LOCATIONS

Along Brittany Street on the south side, approximately 170'. From Howard Avenue and on the north side, approximately 91', from Howard Avenue and ending at the intersection of Brittany Street and Saint Malo Street shall be declared as a "No Parking" zone, and appropriate "No Parking" signs shall be erected and maintained at this location. Any vehicles traveling on Brittany Street shall adhere to the provisions of this ordinance.

SECTION II

If any word, clause, phrase, section or other portion of this ordinance shall be declared null, void, invalid, illegal, or unconstitutional, the remaining words, clauses, phrases, sections or other portions of this ordinance shall remain in full force and effect, the provisions of this section hereby being declared to be severable.

SECTION III

Any ordinance or part thereof in conflict herewith is hereby repealed.

SECTION IV

This ordinance shall become effective upon approval by the Parish President or as otherwise provided in Section 2-13 (b) of the Home Rule Charter for Consolidated Government for Terrebonne Parish, whichever occurs sooner.

This ordinance, having been introduced and laid on the table for at least TWO (2) weeks, was voted upon as follows:
THERE WAS RECORDED:
YEAS:
NAYS:
ABSTAINING:
NOT VOTING:
ABSENT:
The Chairman declared the ordinance adopted on this, the 13th day of December 2017.

_____
ALIDORE "AL" MARMANCE, CHAIRMAN
TERREBONNE PARISH COUNCIL

_____
VENITA H. CHAUVIN
COUNCIL CLERK
TERREBONNE PARISH COUNCIL

* * * * * * * * *

Date and Time Delivered to Parish President:

_____

Approved _____Vetoed
Gordon E. Dove, Parish President
Terrebonne Parish Consolidated Government

Date and Time Returned to Council Clerk:

_____

* * * * * * * * *

I, VENITA H. CHAUVIN, Council Clerk for the Terrebonne Parish Council, do hereby certify that the foregoing is a true and correct copy of an Ordinance adopted by the Assembled Council in Regular Session on December 13, 2017, at which meeting a quorum was present.

GIVEN UNDER MY OFFICIAL SIGNATURE AND SEAL OF OFFICE THIS 13TH DAY OF DECEMBER 2017.

_____
VENITA H. CHAUVIN
COUNCIL CLERK
TERREBONNE PARISH COUNCIL

Attachment A - Brittany Street - Proposed No Parking Zone

DISCLAIMER: Terrebonne Parish makes no warranty as to the reliability or accuracy of the base maps, their associated data tables or the original data collection process and is not responsible for the inaccuracies that could have occurred due to errors in the original data input or subsequent update process. User assumes all responsibility for verifying accuracy of data for any intended use.

November 21, 2017

1 inch = 50 feet

0 25 50 75 100 Feet

Category Number:
Item Number: 6.

Monday, November 27, 2017

Item Title:
Handicapped Parking Only Zone at 521 Barrow Street

Item Summary:
RESOLUTION: Giving notice of intent to amend Ordinance No. 8886 to create a "Handicapped Parking Only Zone" on Barrow Street, located at 521Barrow Street, starting at 43 feet from the corner of Barrow Street and Wood Street, as depicted on the attached map, and to provide for the installation of said signs and to address other matters relative thereto and calling a public hearing on December 13, 2017 at 6:30 p.m.

ATTACHMENTS:

Description	Upload Date	Type
Executive Summary	11/21/2017	Executive Summary
Resolution	11/21/2017	Resolution
Ordinance	11/21/2017	Ordinance
Map & Photos	11/21/2017	Backup Material

EXECUTIVE SUMMARY

(REQUIRED FOR ALL SUBMISSIONS)

PROJECT TITLE
Create a "Handicapped Parking Only Zone" at 521 Barrow Street

PROJECT SUMMARY (200 WORDS OR LESS)
Resolution and Ordinance to create a Handicapped Parking Only Zone at 521 Barrow Street as depicted on the attached map and to provide for the installation of said signs.

PROJECT PURPOSE & BENEFITS (150 WORDS OR LESS)
Resolution and Ordinance amending Ordinance No. 8886 to create a Handicapped Parking Only Zone at 521 Barrow Street as depicted on the attached map and to provide for the installation of said signs.

TOTAL EXPENDITURE				
N/A				
AMOUNT SHOWN ABOVE IS: (CIRCLE ONE)				
ACTUAL – N/A			ESTIMATED	
IS PROJECTALREADY BUDGETED: (CIRCLE ONE)				
N/A	NO	YES	IF YES AMOUNT BUDGETED:	

COUNCIL DISTRICT(S) IMPACTED (CIRCLE ONE)									
PARISHWIDE	1	2	3	4	**5**	6	7	8	9

Signature

11/21/17

Date

OFFERED BY:
SECONDED BY:

RESOLUTION NO.

A RESOLUTION GIVING NOTICE OF INTENT TO AMEND ORDINANCE NO. 8886 TO CREATE A "HANDICAPPED PARKING ONLY ZONE" ON BARROW STREET, LOCATED AT 521 BARROW STREET STARTING AT 43 FEET FROM THE CORNER OF BARROW STREET AND WOOD STREET, AS DEPICTED ON THE ATTACHED MAP, AND TO PROVIDE FOR THE INSTALLATION OF SAID SIGNS AND TO ADDRESS OTHER MATTERS RELATIVE THERETO.

THEREFORE, BE IT RESOLVED by the Terrebonne Parish Council (Public Service Committee), on behalf of the Terrebonne Parish Consolidated Government, that Notice of Intent is given for amending Ordinance no. 8886 to create a "Handicapped Parking Only Zone" on Barrow Street, located at 521 Barrow Street starting at 43 feet from the corner of Barrow Street and Wood Street, and to provide for the installation of said signs and,

BE IT FURTHER RESOLVED that a public hearing on said ordinance be called for Wednesday, December 13, 2017 at 6:30 p.m.

OFFERED BY:
SECONDED BY:

ORDINANCE NO.

AN ORDINANCE AMENDING ORDINANCE NO. 8886, OF THE PARISH CODE OF TERREBONNE PARISH, CHAPTER 18. ARTICLE V. STOPPING, STANDING AND PARKING, DIVISION 1. GENERAL, SECTION 18-197 TO ESTABLISH A "HANDICAPPED PARKING ONLY ZONE" LOCATED ON BARROW STREET AND TO PROVIDE FOR THE INSTALLATION OF SAID SIGNS AND TO ADDRESS OTHER MATTERS RELATIVE THERETO.

SECTION I

BE IT ORDAINED by the Terrebonne Parish Council, in regular session convened, acting pursuant to the authority invested in it by the Constitution and laws of the State of Louisiana, the Home Rule Charter for a Consolidated Government for Terrebonne Parish, and including, but not limited to, LSA R.S. 33:1368 and other statutes of the State of Louisiana, to amend the Parish Code of Terrebonne Parish, Chapter 18, Article V, Division 1, Section 18-197 to create a "HANDICAPPED PARKING ONLY" on Barrow Street, as follows:

CHAPTER 18, Motor Vehicles and Traffic

ARTICLE V, Stopping, Standing and Parking

DIVISION I, General

SECTION 18-197, "HANDICAPPED PARKING ONLY ZONES"

(a) ADD TO EXISTING LIST OF LOCATIONS

On the Barrow Street side of the property located at 521 Barrow Street, at 43 feet from the corner of Barrow Street and Wood Street shall be declared as a "Handicapped Parking Only" zone, and appropriate "Handicapped Only Parking" signs shall be erected and maintained at this location. Any vehicles traveling on Barrow Street shall adhere to the provisions of this ordinance.

SECTION II

If any word, clause, phrase, section or other portion of this ordinance shall be declared null, void, invalid, illegal, or unconstitutional, the remaining words, clauses, phrases, sections or other portions of this ordinance shall remain in full force and effect, the provisions of this section hereby being declared to be severable.

SECTION III

Any ordinance or part thereof in conflict herewith is hereby repealed.

SECTION IV

This ordinance shall become effective upon approval by the Parish President or as otherwise provided in Section 2-13 (b) of the Home Rule Charter for Consolidated Government for Terrebonne Parish, whichever occurs sooner.

This ordinance, having been introduced and laid on the table for at least TWO (2) weeks, was voted upon as follows:
THERE WAS RECORDED:
YEAS:
NAYS:
ABSTAINING:
NOT VOTING:
ABSENT:
The Chairman declared the ordinance adopted on this, the 13th day of December 2017.

_____
ALIDORE "AL" MARMANCE, CHAIRMAN
TERREBONNE PARISH COUNCIL

_____
VENITA H. CHAUVIN
COUNCIL CLERK
TERREBONNE PARISH COUNCIL

* * * * * * * * *

Date and Time Delivered to Parish President:

_____

Approved _____Vetoed
Gordon E. Dove, Parish President
Terrebonne Parish Consolidated Government

Date and Time Returned to Council Clerk:

_____

* * * * * * * * *

I, VENITA H. CHAUVIN, Council Clerk for the Terrebonne Parish Council, do hereby certify that the foregoing is a true and correct copy of an Ordinance adopted by the Assembled Council in Regular Session on December 13, 2017, at which meeting a quorum was present.

GIVEN UNDER MY OFFICIAL SIGNATURE AND SEAL OF OFFICE THIS 13TH DAY OF DECEMBER 2017.

_____
VENITA H. CHAUVIN
COUNCIL CLERK
TERREBONNE PARISH COUNCIL

Geoportal Map

September 1, 2017

DISCLAIMER: Terrebonne Parish makes no warranty as to the reliability or accuracy of the base maps, their associated data tables or the original data collection process and is not responsible for the inaccuracies that could have occurred due to errors in the original data input or subsequent update process. User assumes all responsibility for verifying accuracy of data for any intended use.

1 inch = 42 feet

0 20 40 60 80 Feet

Category Number:
Item Number: 7.

Monday, November 27, 2017

Item Title:
Change Order No. 1 (Final)

Item Summary:
RESOLUTION: Authorizing the execution of Change Order No. 1 (Final) for the Construction Agreement for Parish Project No. 12-PW-CDBG-64, DPW Administrative Building – Survey & Telemetry Building, Terrebonne Parish, Louisiana.

ATTACHMENTS:

Description	Upload Date	Type
Executive Summary	11/21/2017	Executive Summary
Resolution	11/21/2017	Resolution
Backup Material	11/21/2017	Backup Material

EXECUTIVE SUMMARY

(REQUIRED FOR ALL SUBMISSIONS)

PROJECT TITLE
12-PW-CDBG-64 DPW Administrative Building – Survey & Telemetry Building

PROJECT SUMMARY (200 WORDS OR LESS)
To construct a new DPW Administrative Building that will be the headquarters for Public Works Department and contain the Public Works Administration, Road & Bridge Division, Drainage Division, Vegetation Division, Sign Shop, and Fleet Maintenance Facility. The proposed location will reside in the Northern part of Terrebonne Parish with proximity to Highway 24/90 corridor, therefore having a higher flood elevation.

PROJECT PURPOSE & BENEFITS (150 WORDS OR LESS)
Change Order No. 1 (Final) has been recommended to adjust the estimated contract item quantities. This change order will increase the overall contract price by $2,595.60.

TOTAL EXPENDITURE					
$2,595.60					
AMOUNT SHOWN ABOVE IS: (CIRCLE ONE)					
ACTUAL				ESTIMATED	
IS PROJECTALREADY BUDGETED: (CIRCLE ONE)					
N/A	NO	YES	IF YES AMOUNT BUDGETED:	$5,540,341.00	

COUNCIL DISTRICT(S) IMPACTED (CIRCLE ONE)									
PARISHWIDE	1	2	3	4	5	6	7	8	9

Jeanne P. Bray 11/21/2017

_____ _____

Signature Date

OFFERED BY:
SECONDED BY:

R E S O L U T I O N

A resolution authorizing the execution of Change Order No. 1 (Final) for the Construction Agreement for Parish Project No. 12-PW-CDBG-64, DPW Administrative Building – Survey & Telemetry Building, Terrebonne Parish, Louisiana.

WHEREAS, the Terrebonne Parish Consolidated Government entered into a contract dated September 20, 2016 with B.E.T. Construction, Inc., Recordation Number 1516665, for Parish Project No. 12-PW-CDBG-64, DPW Administrative Building – Survey & Telemetry Building, Terrebonne Parish, Louisiana, and

WHEREAS, this change order has been recommended so as to adjust the estimated contract item quantities for the completion of the project described on the attached Change Order No. 1 for the above referenced project, and

WHEREAS, this change order will increase the overall contract price by Two Thousand, Five Hundred and Ninety-Five Dollars and Sixty Cents ($2,595.60), and

WHEREAS, Change Order No. 1 (Final) has been reviewed and approved by OCD, and

WHEREAS, this Change Order No. 1 (Final) has been recommended by the Engineer, Duplantis Design Group, PC, for this project.

NOW, THEREFORE BE IT RESOLVED that the Terrebonne Parish Council on behalf of the Terrebonne Parish Consolidated Government, does hereby approve and authorize the execution by Terrebonne Parish President Gordon E. Dove of Change Order No. 1 (Final) to the construction agreement with B.E.T. Construction, Inc. for Parish Project No. 12-PW-CDBG-64, DPW Administrative Building – Survey & Telemetry Building, Terrebonne Parish, Louisiana, for an increase of Two Thousand, Five Hundred and Ninety-Five Dollars and Sixty Cents ($2,595.60)to the contract, and

BE IT FURTHER RESOLVED that a certified copy of the resolution be forwarded to Engineer, Duplantis Design Group, PC.

THERE WAS RECORDED:
YEAS:
NAYS:
ABSENT & NOT VOTING:

And the Chairman declared the resolution adopted on this _____ day of _____, 2017.

* * * * * *

I, Venita H. Chauvin, Clerk of the Terrebonne Parish Council, Houma, Louisiana, do hereby certify that the foregoing is a true and correct copy of the RESOLUTION adopted by the Terrebonne Parish Council on _____, 2017, at which meeting a quorum was present.

GIVEN UNDER MY OFFICIAL SIGNATURE AND SEAL OF OFFICE THIS _____ DAY OF _____, 2017.

_____
VENITA H. CHAUVIN, CLERK
TERREBONNE PARISH COUNCIL

AIA® Document G701™ – 2017

Change Order

PROJECT: *(Name and address)*	CONTRACT INFORMATION:	CHANGE ORDER INFORMATION:
DPW Survey & Telemetry Building Houma, LA TPCG Project No. 12-PWCDBG-64	Contract For: General Construction Date: September 20, 2016	Change Order Number: 001 Date: November 8, 2017
OWNER: *(Name and address)* Terrebonne Parish Consolidated Government P.O. Box 2768 Houma, LA 70361	**ARCHITECT:** *(Name and address)* Duplantis Design Group, PC 314 East Bayou Road Thibodaux, LA 70301 DDG #12-383	**CONTRACTOR:** *(Name and address)* B.E.T. Construction, Inc. P.O. Box 5658 Thibodaux, LA 70302

THE CONTRACT IS CHANGED AS FOLLOWS:
(Insert a detailed description of the change and, if applicable, attach or reference specific exhibits. Also include agreed upon adjustments attributable to executed Construction Change Directives.)
This shall be the final, balancing Change Order to address remaining items incorporated into the scope fo work as coordinated with the Owner:

1. Correct communication pull box conflict as indicated in PCO #1: ADD $1,055.45
2. Credit for smaller data rack used as indicated in PCO #2: DEDUCT $575.00
3. Provide and install gutters and downspouts at the 2 exits as requested by TPCG: ADD $2,115.15

NET CHANGE FOR THIS CHANGE ORDER: (ADD) $2,595.60

The original Contract Sum was	$	368,405.00
The net change by previously authorized Change Orders	$	0.00
The Contract Sum prior to this Change Order was	$	368,405.00
The Contract Sum will be increased by this Change Order in the amount of	$	2,595.60
The new Contract Sum including this Change Order will be	$	371,000.60

The Contract Time will be unchanged by Zero (0) days.
The new date of Substantial Completion will be April 26, 2017 per the Certificate of Substantial Completion

NOTE: This Change Order does not include adjustments to the Contract Sum or Guaranteed Maximum Price, or the Contract Time, that have been authorized by Construction Change Directive until the cost and time have been agreed upon by both the Owner and Contractor, in which case a Change Order is executed to supersede the Construction Change Directive.

NOT VALID UNTIL SIGNED BY THE ARCHITECT, CONTRACTOR AND OWNER.

Duplantis Design Group, PC	B.E.T. Construction, Inc.	Terrebonne Parish Consolidated Government
ARCHITECT *(Firm name)*	**CONTRACTOR** *(Firm name)*	**OWNER** *(Firm name)*
SIGNATURE	**SIGNATURE**	**SIGNATURE**
Lloyd A. Positerry, II, AIA, Principal	Emile Raynal, President	Gordon E. Dove, Parish President
PRINTED NAME AND TITLE	**PRINTED NAME AND TITLE**	**PRINTED NAME AND TITLE**
11/8/17	11/13/17	
DATE	**DATE**	**DATE**

AIA Document G701™ – 2017. Copyright © 1979, 1987, 2000 , 2001 and 2017 by The American Institute of Architects. **All rights reserved. WARNING: This AIA® Document is protected by U.S. Copyright Law and International Treaties. Unauthorized reproduction or distribution of this AIA® Document, or any portion of it, may result in severe civil and criminal penalties, and will be prosecuted to the maximum extent possible under the law.** This document was produced by AIA software at 07:45:56 on 11/09/2017 under Order No. 8861218399 which expires on 09/05/2018, and is not for resale.
User Notes:
(3B9ADA3F)

B.E.T. CONSTRUCTION, INC.

PCO #001

B.E.T. Construction, Inc.
PO Box 5658
Thibodaux, Louisiana 70302
Phone: 985-447-5764
Fax: 985-447-3171

Project: 16530 - DPW Survey & Telemetry Building (16530)
3629 Olympian Drive
Gray, Louisiana 70359

Prime Contract Potential Change Order #001: Communication Pull Box Conflict

TO:	Terrebonne Parish Consolidated Government Government Tower 8026 Main Street, Seventh Floor Houma Louisiana, 70360	**FROM:**	B.E.T. Construction, Inc. P.O. Box 5658 Thibodaux Louisiana, 70302
PCO NUMBER/REVISION:	001 / 0	**CONTRACT:**	1 - DPW Survey & Telemetry Building (16530) Prime Contract
REQUEST RECEIVED FROM:		**CREATED BY:**	Tabitha Knoblock **(B.E.T. Construction, Inc.)**
STATUS:	Pending - In Review	**CREATED DATE:**	4/27 /2017
REFERENCE:		**PRIME CONTRACT CHANGE ORDER:**	None
FIELD CHANGE:	No		
LOCATION:		**ACCOUNTING METHOD:**	Amount Based
SCHEDULE IMPACT:		**PAID IN FULL:**	No
		TOTAL AMOUNT:	$1,055.45

POTENTIAL CHANGE ORDER TITLE: Communication Pull Box Conflict

CHANGE REASON: Required

POTENTIAL CHANGE ORDER DESCRIPTION: *(The Contract Is Changed As Follows)*
Drill and epoxy rebar into existing foundation to receive new sidewalk.
Excavate and raise existing Communication Pull Boxes to new side walk grades.
Form and pour new sidewalk.

MATERIAL $350.00
BETCO O&P $35.00
LABOR $660.00
SUBTOTAL $1,045.00
BOND INCREASE $10.45
TOTAL PCO $1,055.45

ATTACHMENTS:

DDG hinged slab extension - section 10 (002).pdf DDG hinged slab extension - plan (002).pdf DDG C-1 TELEMETRY SITE PLAN-- sidewalk revisions - Copy.pdf DDG hinged slab extension - section 11 (002).pdf

Andy Positerry (Duplantis Design Group PC)	**Terrebonne Parish Consolidated Government**	**B.E.T. Construction, Inc.**
314 East Bayou Road	Government Tower 8026 Main Street, Seventh Floor	P.O. Box 5658
Thibodaux Louisiana 70301	Houma Louisiana 70360	Thibodaux Louisiana 70302
SIGNATURE **DATE**	**SIGNATURE** **DATE**	**SIGNATURE** **DATE**

Sidewalk Revision Sketch (1-12-17)

SCALE: 1"=10'

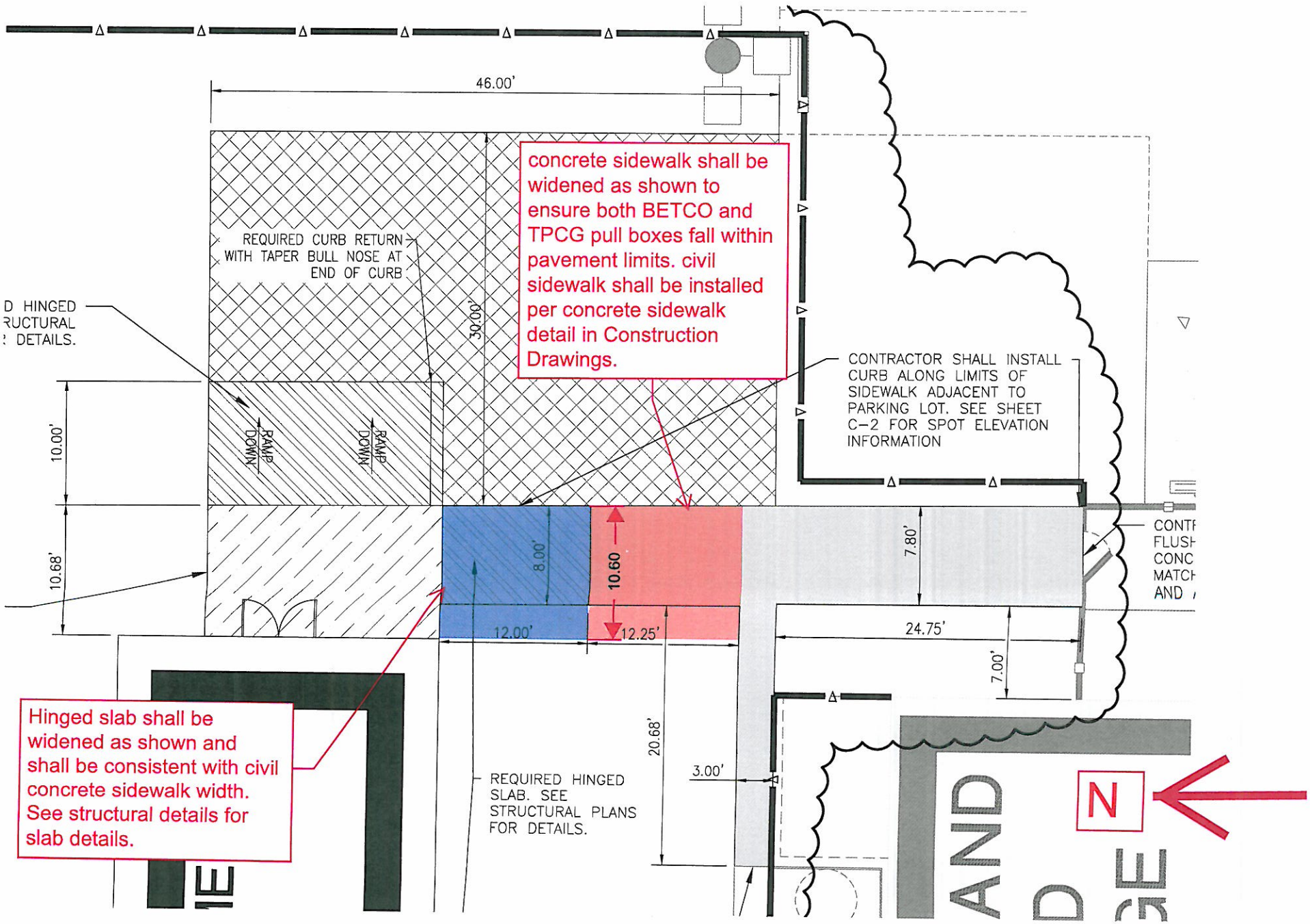

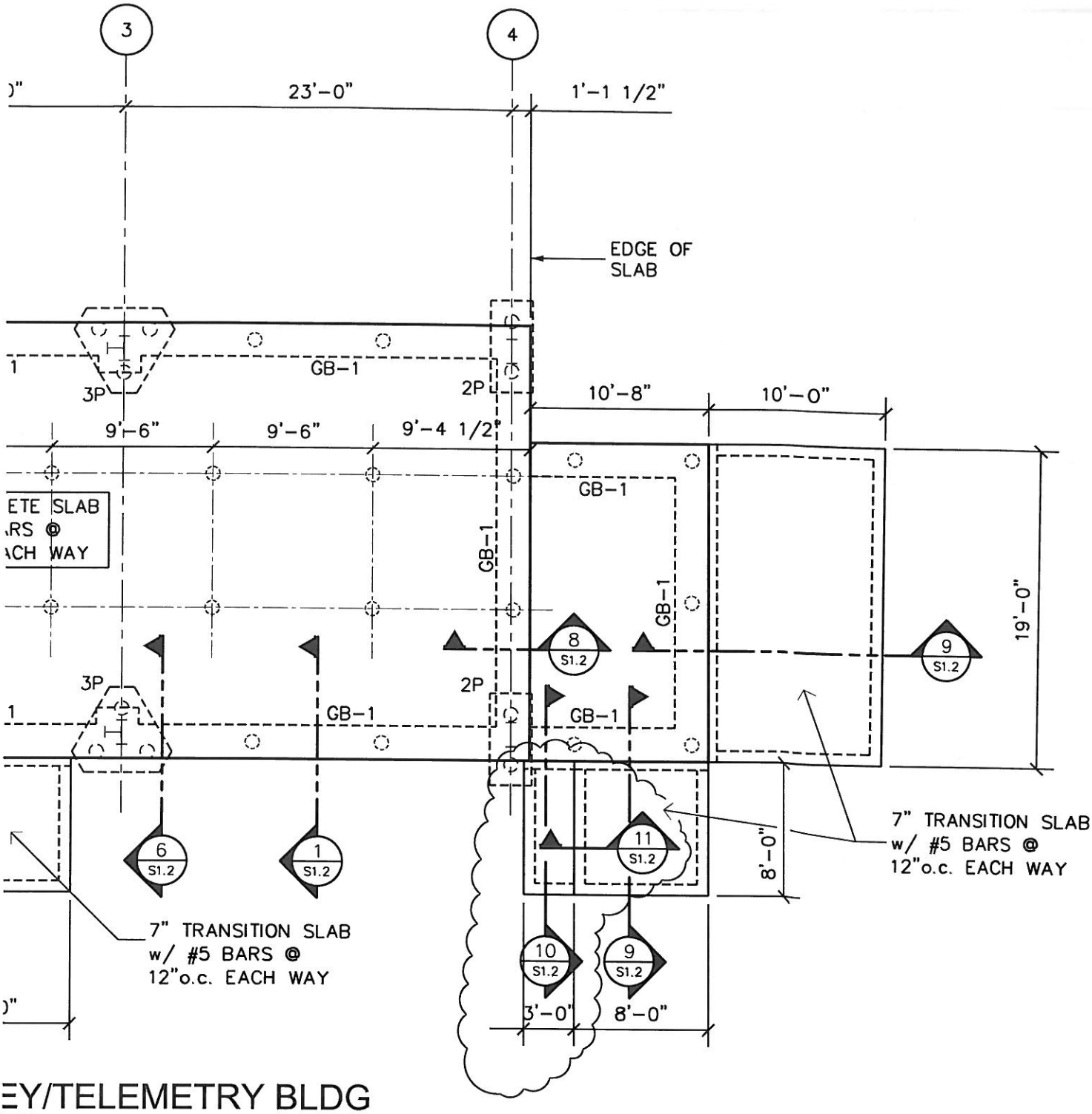

EY/TELEMETRY BLDG

ions to Architect
ion construction.
nay be required due

signed with pinned
designed for base

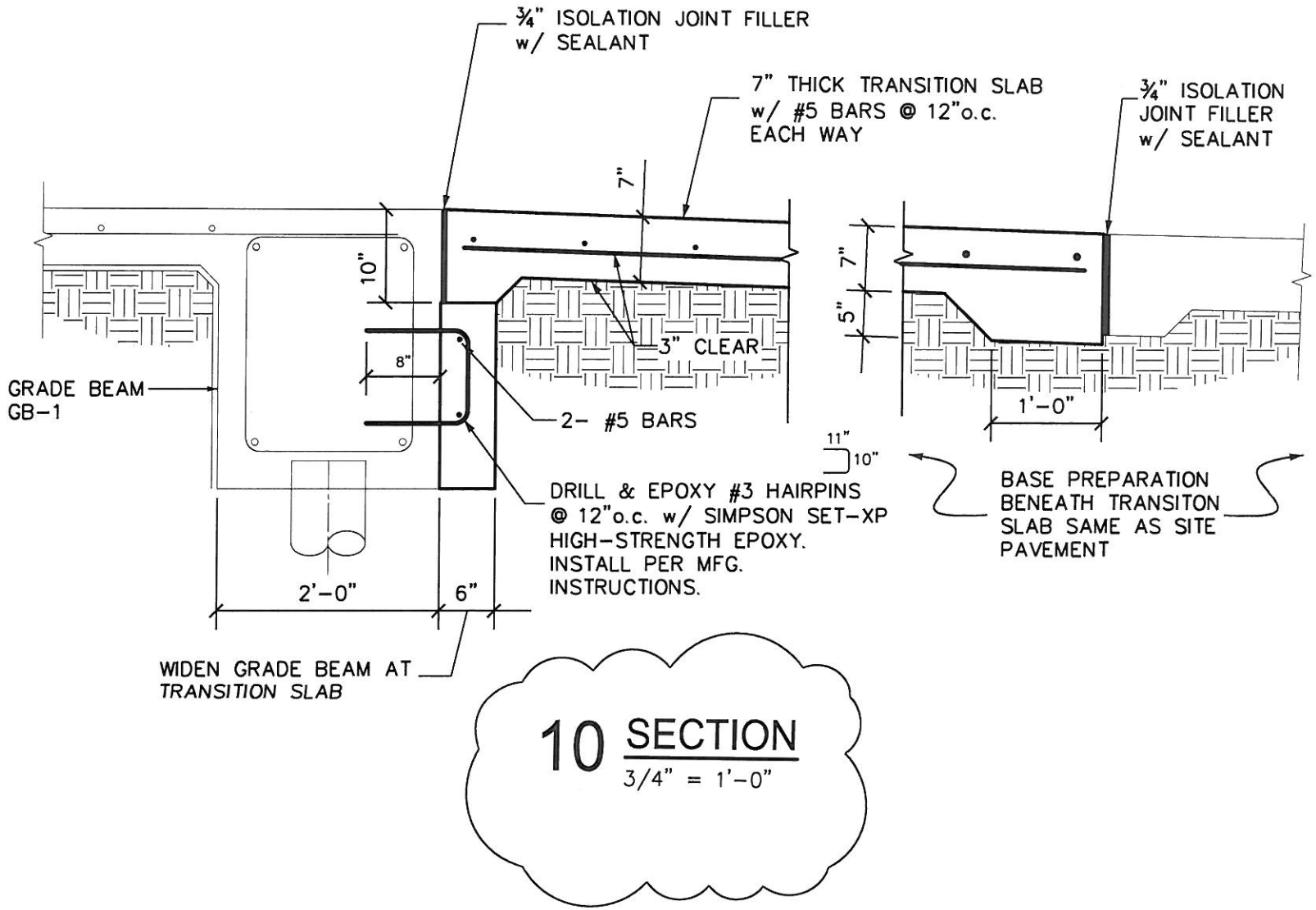

10 SECTION
3/4" = 1'-0"

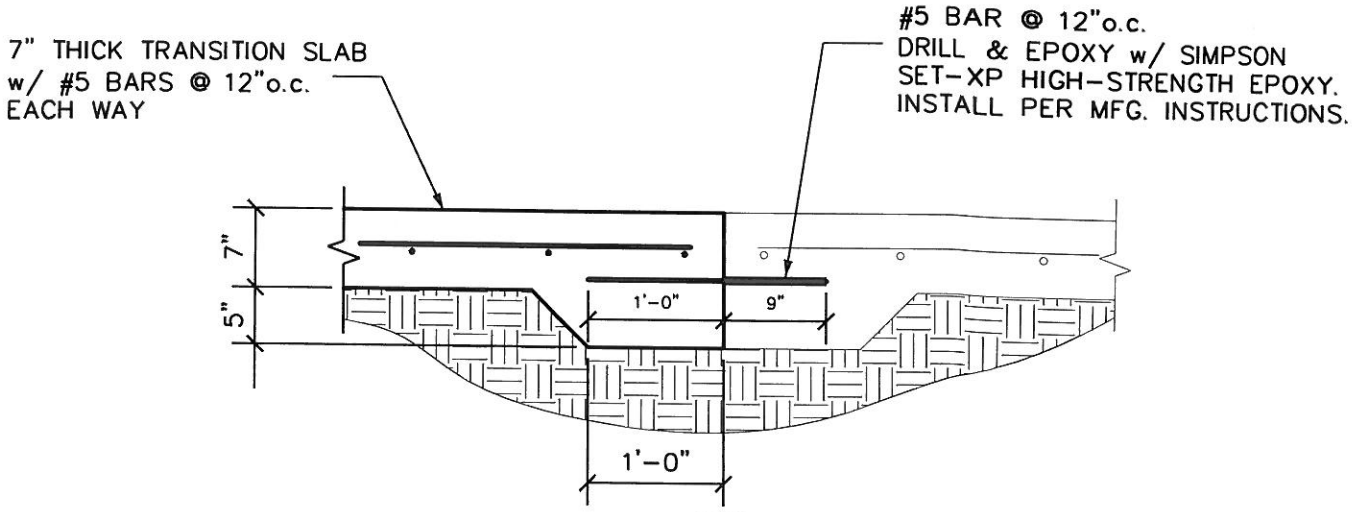

11 SECTION
3/4" = 1'-0"

B.E.T. "BETCO" CONSTRUCTION, INC.

PCO #002

B.E.T. Construction, Inc.
PO Box 5658
Thibodaux, Louisiana 70302
Phone: 985-447-5764
Fax: 985-447-3171

Project: 16530 - DPW Survey & Telemetry Building (16530)
3629 Olympian Drive
Gray, Louisiana 70359

Prime Contract Potential Change Order #002: Rack Cabinet Credit

TO:	Terrebonne Parish Consolidated Government Government Tower 8026 Main Street, Seventh Floor Houma Louisiana, 70360	**FROM:**	B.E.T. Construction, Inc. P.O. Box 5658 Thibodaux Louisiana, 70302
PCO NUMBER/REVISION:	002 / 0	**CONTRACT:**	1 - DPW Survey & Telemetry Building (16530) Prime Contract
REQUEST RECEIVED FROM:		**CREATED BY:**	Tabitha Knoblock **(B.E.T. Construction, Inc.)**
STATUS:	Pending - In Review	**CREATED DATE:**	4/27 /2017
REFERENCE:		**PRIME CONTRACT CHANGE ORDER:**	None
FIELD CHANGE:	No		
LOCATION:		**ACCOUNTING METHOD:**	Amount Based (G702/G703)
SCHEDULE IMPACT:		**PAID IN FULL:**	No
		TOTAL AMOUNT:	($575.00)

POTENTIAL CHANGE ORDER TITLE: Rack Cabinet Credit

CHANGE REASON:

POTENTIAL CHANGE ORDER DESCRIPTION: *(The Contract Is Changed As Follows)*
Rack Cabinet per attached ($575.00)

ATTACHMENTS:
FW Credit on DPW Telemetry.msg

Andy Positerry (Duplantis Design Group PC)	**Terrebonne Parish Consolidated Government**	**B.E.T. Construction, Inc.**
314 East Bayou Road	Government Tower 8026 Main Street, Seventh Floor	P.O. Box 5658
Thibodaux Louisiana 70301	Houma Louisiana 70360	Thibodaux Louisiana 70302
SIGNATURE **DATE**	**SIGNATURE** **DATE**	**SIGNATURE** **DATE**

B.E.T. "BETCO" CONSTRUCTION, INC.

PCO #004

B.E.T. Construction, Inc.
PO Box 5658
Thibodaux, Louisiana 70302
Phone: 985-447-5764
Fax: 985-447-3171

Project: 16530 - DPW Survey & Telemetry Building (16530)
3629 Olympian Drive
Gray, Louisiana 70359

Prime Contract Potential Change Order #004: Additional Roofing and Gutters

TO:	Terrebonne Parish Consolidated Government Government Tower 8026 Main Street, Seventh Floor Houma Louisiana, 70360	**FROM:**	B.E.T. Construction, Inc. P.O. Box 5658 Thibodaux Louisiana, 70302
PCO NUMBER/REVISION:	004 / 0	**CONTRACT:**	1 - DPW Survey & Telemetry Building (16530) Prime Contract
REQUEST RECEIVED FROM:		**CREATED BY:**	Tabitha Knoblock **(B.E.T. Construction, Inc.)**
STATUS:	Pending - In Review	**CREATED DATE:**	10/11 /2017
REFERENCE:		**PRIME CONTRACT CHANGE ORDER:**	None
FIELD CHANGE:	No		
LOCATION:		**ACCOUNTING METHOD:**	Amount Based (G702/G703)
SCHEDULE IMPACT:		**PAID IN FULL:**	No
		TOTAL AMOUNT:	$2,115.15

POTENTIAL CHANGE ORDER TITLE: Additional Roofing and Gutters

CHANGE REASON: Requested

POTENTIAL CHANGE ORDER DESCRIPTION: *(The Contract Is Changed As Follows)*
Alliance - Additional gutters and downspouts $967.45
Sheet Metal Masters - Installation $500.00
Subtotal $1,467.45
BETCO Fee (10%) $146.75
Subtotal $1,614.20
BETCO Supervision $480.00
Subtotal $2,094.20
Bond Increase (1%) $20.95
TOTAL PCO $2,115.15

ATTACHMENTS:
Alliance 10.11.17.pdf

Andy Positerry (Duplantis Design Group PC)	**Terrebonne Parish Consolidated Government**	**B.E.T. Construction, Inc.**
314 East Bayou Road	Government Tower 8026 Main Street, Seventh Floor	P.O. Box 5658
Thibodaux, Louisiana 70301	Houma, Louisiana 70360	Thibodaux, Louisiana 70302
SIGNATURE **DATE**	**SIGNATURE** **DATE**	**SIGNATURE** **DATE**

MBMA METAL BUILDING MANUFACTURERS ASSOCIATION

IAS ACCREDITED AC472

UL LISTED

Alliance STEEL BUILDING SYSTEMS

ENERGY STAR PARTNER

3333 South Council Road * Oklahoma City, OK 73179-4410
405.745.7500 * 800.624.1579 * Fax 405.745.7502 * www.allianceokc.com

CPQ-006220

*****Quote*****

Customer:	Ship To: **Job Site**	P O #:	Job #:
BYRON E. TALBOT CONSTRUCTION PO BOX 5658 THIOBODAUX LA 70302	DPW SURVEYING & TELEMETRY 207 Government Street HOUMA LA 70361	Order Date: 10/11/17	ETA Date 10/11/17
		ETS Date: 10/11/17	Invoice Date: 10/11/17
Contact: Marvin @ 985-637-8154		Salesperson: 12-001 KW	Payable: **C.O.D.**

Piece #	Material	Ga	Finish & Color	---Qty---	------Length------
Screw Bin					
LS-100	Butyl Tape Sealant (3/16"x7/8")(40' Roll)			1	' " /
Panel Fastener	1/8" Rivet SS (Painted)		Brownstone	250	' " /
RF3	#14x7/8" SDS-Long Life (Painted)		Brownstone	100	' " /
RF3	#14x7/8" SDS-Long Life (Painted)		Almond	100	' " /
Tube Caulk	Tite bond (clear)		Clear	1	' " /
Trim					
AKT-03	ALOK-16 Corner Box (Lowside-Standard)(R	24	Kynar Brownstone	2	' " /
AKT-03	ALOK-16 Corner Box (Lowside-Standard)(LH	24	Kynar Brownstone	2	' " /
AKT-06L	Std Eave Gutter Ends LH	24	Kynar Brownstone	2	' " /
AKT-06R	Std Eave Gutter Ends RH	24	Kynar Brownstone	2	' " /
AKT-08	Eave Gutter Strap-Spl/Std	24	Kynar Almond	10	' " /
AKT-12	Eave Gutter-Std 1/2-12:12	24	Kynar Brownstone	2	10' 0" /
DS54-01	5x4 Downspout with kickout	24	Kynar Brownstone	2	10' 0" /
DS54-03	5x4 Downspout Return (A = 4'-6")	24	Kynar Brownstone	2	' " /
DSS-54	Downspout Sleeve - 5x4 - (outlet)		Mill Finish	2	' " /
DST54-R	Downspout strap for R-panel	24	Kynar Brownstone	4	' " /

Tot Wt. 0

I am authorized by the Buyer to accept the materials sold hereby I have counted and inspected them and acknowledge them to be complete and in good order. On behalf of buyer I have read and agree to the terms and conditions on the reverse side of buyers copy. In addition I understand that secondary material is sold 'AS IS' and no warranties will be extended on secondary materials.

Date _____ Signature _____

Material:	554.25
Sales Tax: 0006	95.47
Freight:	355.00
Total Amount Due:	1,004.72

*** QUOTE IS GOOD THRU November 11, 2017 ***

MBMA METAL BUILDING MANUFACTURERS ASSOCIATION

IAS ACCREDITED AC472

UL LISTED

Alliance STEEL BUILDING SYSTEMS

ENERGY STAR PARTNER

3333 South Council Road * Oklahoma City, OK 73179-4410
405.745.7500 * 800.624.1579 * Fax 405.745.7502 * www.allianceokc.com

CPQ-006220

*****Quote*****

Customer:	Ship To: **Job Site**	P O #:	Job #:
BYRON E. TALBOT CONSTRUCTION PO BOX 5658 THIOBODAUX LA 70302	DPW SURVEYING & TELEMETRY 207 Government Street HOUMA LA 70361		16-467
		Order Date: 10/11/17	ETA Date 10/11/17
		ETS Date: 10/11/17	Invoice Date: 10/11/17
Contact: Marvin @ 985-637-8154		Salesperson: 12-001 KW	Payable: **C.O.D.**

Piece #	Material	Ga	Finish & Color	---Qty---	------Length------
Screw Bin					
LS-100	Butyl Tape Sealant (3/16"x7/8")(40' Roll)			1	' " /
Panel Fastener	1/8" Rivet SS (Painted)		Brownstone	250	' " /
RF3	#14x7/8" SDS-Long Life (Painted)		Brownstone	100	' " /
RF3	#14x7/8" SDS-Long Life (Painted)		Almond	100	' " /
Tube Caulk	Tite bond (clear)		Clear	1	' " /
Trim					
AKT-03	ALOK-16 Corner Box (Lowside-Standard)(R	24	Kynar Brownstone	2	' " /
AKT-03	ALOK-16 Corner Box (Lowside-Standard)(LH	24	Kynar Brownstone	2	' " /
AKT-06L	Std Eave Gutter Ends LH	24	Kynar Brownstone	2	' " /
AKT-06R	Std Eave Gutter Ends RH	24	Kynar Brownstone	2	' " /
AKT-08	Eave Gutter Strap-Spl/Std	24	Kynar Almond	10	' " /
AKT-12	Eave Gutter-Std 1/2-12:12	24	Kynar Brownstone	2	10' 0" /
DS54-01	5x4 Downspout with kickout	24	Kynar Brownstone	2	10' 0" /
DS54-03	5x4 Downspout Return (A = 4'-6")	24	Kynar Brownstone	2	' " /
DSS-54	Downspout Sleeve - 5x4 - (outlet)		Mill Finish	2	' " /
DST54-R	Downspout strap for R-panel	24	Kynar Brownstone	4	' " /

Tot Wt. 0

I am authorized by the Buyer to accept the materials sold hereby I have counted and inspected them and acknowledge them to be complete and in good order. On behalf of buyer I have read and agree to the terms and conditions on the reverse side of buyers copy. In addition I understand that secondary material is sold 'AS IS' and no warranties will be extended on secondary materials.

Date _____ Signature _____

Material:	554.25
Sales Tax: 0006	95.47
Freight:	355.00
Total Amount Due:	1,004.72

*** QUOTE IS GOOD THRU November 11, 2017 ***

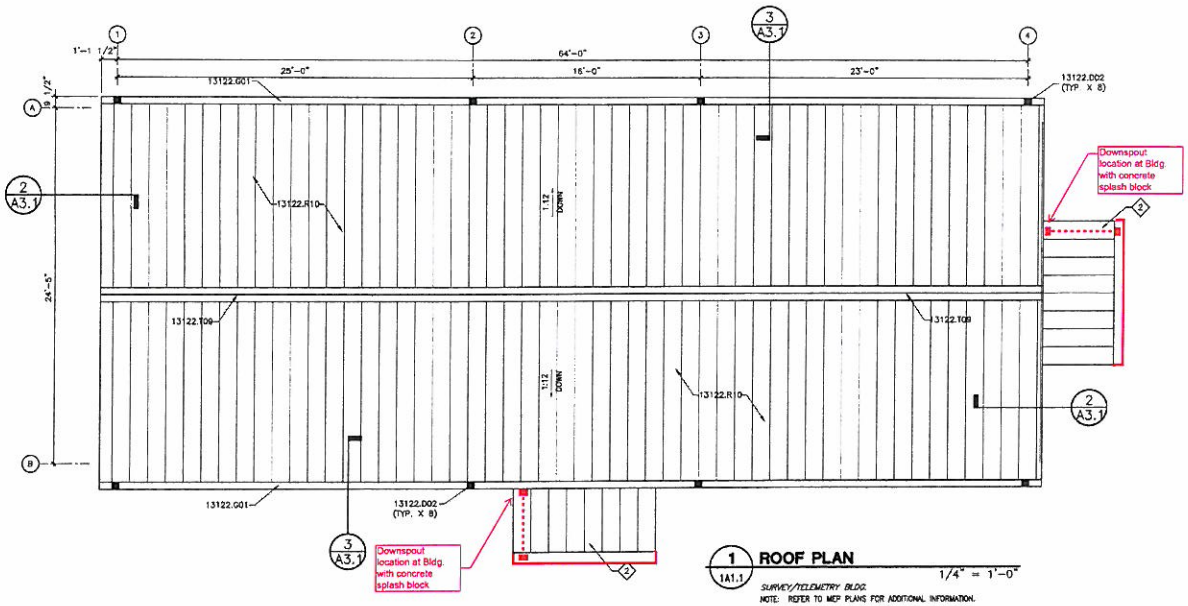

1 ROOF PLAN
1A1.1 — 1/4" = 1'-0"

SURVEY/TELEMETRY BLDG.

NOTE: REFER TO MEP PLANS FOR ADDITIONAL INFORMATION.

3 SPECIFIC NOTES

1. PROVIDE UNFACED BATT INSULATION BETWEEN PURLINS AND SECURE AT BOTTOM WITH "POULTRY WIRE" AS REQUIRED TO PROVIDE AN R-30 IN CONJUNCTION WITH THE VINYL-BACKED INSULATION.
2. PREFABRICATED METAL BUILDING ENTRY AWNING (FINISH TO BE SELECTED FROM MANUFACTURER'S STANDARD COLORS) (TYP.)

4 KEYNOTES

07530.C01	–	STAINLESS STEEL CLAMPING RING
07530.P01	–	PRE-MOLDED PIPE FLASHING
07600.F12	–	FASTENER WITH NEOPRENE WASHER @ 6" O.C.
07920.S01	–	FLEXIBLE SEALANT
13122.A02	–	RAKE ANGLE
13122.B10	–	VINYL FACED BLANKET INSULATION, SEE SPEC FOR R-VALUE
13122.D02	–	PT'D. MTL. DOWNSPOUT
13122.G01	–	PT'D. MTL. GUTTER
13122.G02	–	GUTTER STRAP @ 36" O.C.
13122.H01	–	MTL. BLDG 8" GIRT
13122.P01	–	8" ROOF PURLIN
13122.R01	–	ROLL FORMED STANDING SEAM MTL. ROOF
13122.R02	–	RIGID FRAME RAFTER – TAPERED
13122.R10	–	24 GA PREFIN METAL STANDING SEAM ROOF, CONCEALED FASTENER
13122.S02	–	8" EAVE STRUT
13122.S06	–	EAVE STRUT SUPPORT
13122.T06	–	PREFIN. MTL. RAKE TRIM
13122.T09	–	PREFIN. MTL. RIDGE TRIM
13122.T13	–	PREFIN. MTL. DRIP TRIM
13122.W01	–	PREFIN. MTL. WALL PANEL

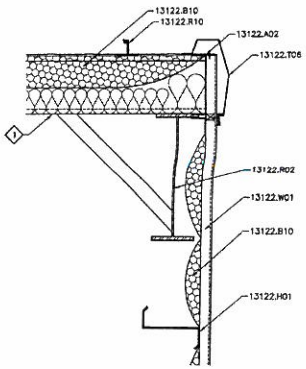

2 DETAIL
1A3.1 — 1-1/2"=1'-0"

RAKE TRIM

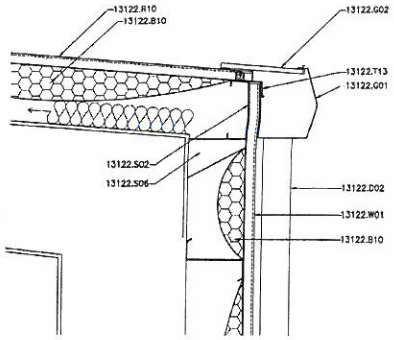

3 DETAIL
1A3.1 — 1-1/2"=1'-0"

EAVE

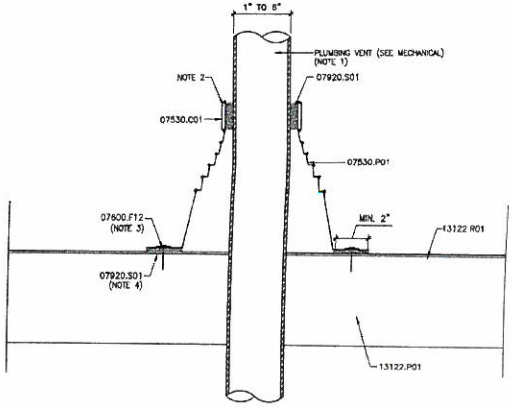

4 DETAIL
1A3.1 — 3"=1'-0"

ROOF PENETRATION

NOTES:
1. TEMPERATURE OF PIPE MUST NOT EXCEED 120°F (49°C).
2. PIPE SEAL MUST HAVE INTACT RIB AT TOP EDGE, REGARDLESS OF PIPE DIAMETER.
3. INSTALL FASTENERS WITH NEOPRENE WASHERS AS RECOMMENDED BY FLASHING MANUFACTURER.
4. PIPE FLASHING DECK FLANGE MUST BE EMBEDDED IN SEALANT A MINIMUM OF 2".

DATE	DESCRIPTION	BY

REVISION

DUPLANTIS DESIGN GROUP, PC
CIVIL ENGINEERING • ARCHITECTURE
100 ELMIRE ROAD, SUITE A HOUMA, LA 70360
PHONE: 985.868.0143 \\ FAX: 985.868.8817
WWW.DDGPC.COM
THIBODAUX \ COVINGTON \ HOUSTON \ BATON ROUGE \ HOUMA

SEALED: DATE:

STAMP

NEW SURVEY & TELEMETRY BUILDING
207 GOVERNMENT STREET
HOUMA, LOUISIANA

TERREBONNE PARISH CONSOLIDATED GOVERNMENT
HOUMA, LA

DRAWN	LAP
CHECKED	LAP
DATE	12/29/15
SCALE	AS NOTED ON DWG
PROJECT NO.	12-083A
FILE:	
SHEET	A3.1

Category Number:
Item Number: 8.

Monday, November 27, 2017

Item Title:
Substantial Completion - Survey & Telemetry Building

Item Summary:
RESOLTION: Providing for the acceptance of work performed by B.E.T. Construction, Inc., in accordance with the Certificate of Substantial Completion for Parish Project 12-PWCDBG-64, DPW Administrative Building, Terrebonne Parish, Louisiana.

ATTACHMENTS:

Description	Upload Date	Type
Executive Summary	11/21/2017	Executive Summary
Resolution	11/21/2017	Backup Material
Backup Material	11/21/2017	Backup Material

EXECUTIVE SUMMARY

(REQUIRED FOR ALL SUBMISSIONS)

PROJECT TITLE
12-PW-CDBG-64 DPW Administrative Building – Survey & Telemetry Building

PROJECT SUMMARY (200 WORDS OR LESS)
To construct a new DPW Administrative Building that will be the headquarters for Public Works Department and contain the Public Works Administration, Road & Bridge Division, Drainage Division, Vegetation Division, Sign Shop, and Fleet Maintenance Facility. The proposed location will reside in the Northern part of Terrebonne Parish with proximity to Highway 24/90 corridor, therefore having a higher flood elevation.

PROJECT PURPOSE & BENEFITS (150 WORDS OR LESS)
This certificate of Substantial Completion applies to all Work that has been inspected and that the work is substantially completed in accordance with the Contract Documents.

TOTAL EXPENDITURE				
N/A				
AMOUNT SHOWN ABOVE IS: (CIRCLE ONE)				
	ACTUAL		ESTIMATED	
IS PROJECTALREADY BUDGETED: (CIRCLE ONE)				
N/A	NO	YES	IF YES AMOUNT BUDGETED:	$5,540,341.00

COUNCIL DISTRICT(S) IMPACTED (CIRCLE ONE)									
PARISHWIDE	1	2	3	4	5	6	7	8	9

Jeanne P. Bray 11/21/2017

_____ _____

Signature Date

OFFERED BY:
SECONDED BY:

RESOLUTION

A resolution providing for the acceptance of work performed by B.E.T. Construction, Inc., in accordance with the Certificate of Substantial Completion for Parish Project 12-PWCDBG-64, DPW Administrative Building – Survey & Telemetry Building, Terrebonne Parish, Louisiana.

WHEREAS, the Terrebonne Parish Consolidated Government entered into a contract dated September 20, 2016 with B.E.T. Construction, Inc., for Parish Project 12-PW-CDBG-64, DPW Administrative Building – Survey & Telemetry Building, Terrebonne Parish, Louisiana, as will be seen by reference to said contract which is recorded under Entry No. 1516665 of the records of Terrebonne Parish, and

WHEREAS, the work performed has been inspected by authorized representatives of the Owner, Engineer, and Contractor and found to be substantially complete, and

WHEREAS, the Engineer for this project, Duplantis Design Group, PC, recommends the acceptance of the substantial completion,

NOW, THEREFORE BE IT RESOLVED that the Terrebonne Parish Council, on behalf of the Terrebonne Parish Consolidated Government, does hereby accept the work performed, effective as of the date of recording of this resolution, and does authorize and direct the Clerk of Court and Ex-Officio Recorder of Mortgages of Terrebonne Parish to note this acceptance thereof in the margin of the inscription of said contract under Entry No. 1516665 of the Records of Terrebonne Parish, Louisiana, and

BE IT FURTHER RESOLVED that a certified copy of the resolution be forwarded to the Engineer Duplantis Design Group, PC, and

BE IT FURTHER RESOLVED that a certified copy of the resolution be recorded in the office of the Clerk of Court of Terrebonne Parish to commence a 45-day clear lien period, and

BE IT FURTHER RESOLVED that the Administration is authorized to make payment of retainage upon the presentation of a Clear Lien Certificate.

THERE WAS RECORDED:

YEAS:

NAYS:

NOT VOTING:

ABSENT:

The chairman declared the resolution adopted on this _____ day of _____, 2017.

****

I, VENITA H. CHAUVIN, Clerk of the Terrebonne Parish Council, Houma, Louisiana, do hereby certify that the foregoing is a true and correct copy of the RESOLUTION adopted by the Terrebonne Parish Council on _____, 2017, at which meeting a quorum was present.

GIVEN UNDER MY OFFICIAL SIGNATURE AND SEAL OF OFFICE THIS _____ DAY _____, 2017.

_____
VENITA H. CHAUVIN, CLERK
TERREBONNE PARISH COUNCIL

AIA® Document G704™ – 2017

Certificate of Substantial Completion

PROJECT: *(name and address)* DPW Survey & Telemetry Building Houma, LA TPCG Project No. 12-PWCDBG-64	**CONTRACT INFORMATION:** Contract For: General Construction Date: September 20, 2016	**CERTIFICATE INFORMATION:** Certificate Number: 001 Date: October 18, 2017
OWNER: *(name and address)* Terrebonne Parish Consolidated Government P.O. Box 2768 Houma, LA 70361	**ARCHITECT:** *(name and address)* Duplantis Design Group, PC 314 East Bayou Road Thibodaux, LA 70301	**CONTRACTOR:** *(name and address)* B.E.T. Construction, Inc. P.O. Box 5658 Thibodaux, LA 70302

The Work identified below has been reviewed and found, to the Architect's best knowledge, information, and belief, to be substantially complete. Substantial Completion is the stage in the progress of the Work when the Work or designated portion is sufficiently complete in accordance with the Contract Documents so that the Owner can occupy or utilize the Work for its intended use. The date of Substantial Completion of the Project or portion designated below is the date established by this Certificate.

(Identify the Work, or portion thereof, that is substantially complete.)

All work shown in the Bidding Documents and subsequent written, approved Change Orders prepared by Duplantis Design Group, PC. Note that this document was not initially issued at the time of the Substantial Completion inspection due to the timing of final Owner-requested change order items to be designed and priced by the project team.

Duplantis Design Group, PC **ARCHITECT** *(Firm Name)*	**SIGNATURE**	Lloyd A. Positerry, II, AIA, Principal **PRINTED NAME AND TITLE**	April 26, 2017 **DATE OF SUBSTANTIAL COMPLETION**

WARRANTIES

The date of Substantial Completion of the Project or portion designated above is also the date of commencement of applicable warranties required by the Contract Documents, except as stated below:

(Identify warranties that do not commence on the date of Substantial Completion, if any, and indicate their date of commencement.)

The required 1-year Contractor's warranty, and other required material and equipment warranties, shall commence on the Date of Substantial Completion identified above.

WORK TO BE COMPLETED OR CORRECTED

A list of items to be completed or corrected is attached hereto, or transmitted as agreed upon by the parties, and identified as follows:

(Identify the list of Work to be completed or corrected.)

All punch list items have been completed and verified with the Owner as of the date of this certificate.

The failure to include any items on such list does not alter the responsibility of the Contractor to complete all Work in accordance with the Contract Documents. Unless otherwise agreed to in writing, the date of commencement of warranties for items on the attached list will be the date of issuance of the final Certificate of Payment or the date of final payment, whichever occurs first. The Contractor will complete or correct the Work on the list of items attached hereto within forty-five (45) days from the above date of Substantial Completion.

Cost estimate of Work to be completed or corrected: $0.00

The responsibilities of the Owner and Contractor for security, maintenance, heat, utilities, damage to the Work, insurance, and other items identified below shall be as follows:

(Note: Owner's and Contractor's legal and insurance counsel should review insurance requirements and coverage.)

AIA Document G704™ – 2017. Copyright © 1963, 1978, 1992, 2000 and 2017 by The American Institute of Architects. **All rights reserved. WARNING: This AIA® Document is protected by U.S. Copyright Law and International Treaties. Unauthorized reproduction or distribution of this AIA® Document, or any portion of it, may result in severe civil and criminal penalties, and will be prosecuted to the maximum extent possible under the law.** This document was produced by AIA software at 17:13:46 on 11/08/2017 under Order No. 8861218399 which expires on 09/05/2018, and is not for resale.
User Notes:
(3B9ADA3C)

Except for items covered by the Contractor's warranty, punch list items, other non-conforming work, and damage to the work caused by the Contractor or his forces, the Owner shall be responsible for security, maintenance, utilities, insurance, and damage to the work as of the date and time stipulated above.

The Owner and Contractor hereby accept the responsibilities assigned to them in this Certificate of Substantial Completion:

B.E.T. Construction, Inc. **CONTRACTOR** *(Firm Name)*	**SIGNATURE**	Emile Raynal, President **PRINTED NAME AND TITLE**	11/13/17 **DATE**
Terrebonne Parish Consolidated Government **OWNER** *(Firm Name)*	**SIGNATURE**	Gordon E. Dove, Parish President **PRINTED NAME AND TITLE**	**DATE**

AIA Document G704™ – 2017. Copyright © 1963, 1978, 1992, 2000 and 2017 by The American Institute of Architects. **All rights reserved. WARNING: This AIA® Document is protected by U.S. Copyright Law and International Treaties. Unauthorized reproduction or distribution of this AIA® Document, or any portion of it, may result in severe civil and criminal penalties, and will be prosecuted to the maximum extent possible under the law.** This document was produced by AIA software at 17:13:46 on 11/08/2017 under Order No. 8861218399 which expires on 09/05/2018, and is not for resale.
User Notes:
(3B9ADA3C)

Category Number:
Item Number: 9.

Monday, November 27, 2017

Item Title:
Award for HPD Wind Hardening

Item Summary:
RESOLUTION: Awarding and authorizing the signing of the construction Contract for Parish Project No. 14-HPD-14, Critical Facilities Hardening – Houma Police Department (HMGP), Terrebonne Parish Consolidated Government, Terrebonne Parish, Louisiana, and authorizing the issuance of the Notice to Proceed.

ATTACHMENTS:

Description	Upload Date	Type
Executive Summary	11/21/2017	Executive Summary
Backup	11/21/2017	Budget Amendment
Resolution	11/21/2017	Resolution

EXECUTIVE SUMMARY

(REQUIRED FOR ALL SUBMISSIONS)

PROJECT TITLE
14-HPD-14 Critical Facilities Hardening – Houma Police Department (HMGP)

PROJECT SUMMARY (200 WORDS OR LESS)
Wind hardening of the Houma Police Department

PROJECT PURPOSE & BENEFITS (150 WORDS OR LESS)
This resolution allows for the award of the construction bid to Thomassie Construction, Inc.

TOTAL EXPENDITURE					
$697,100.00					
AMOUNT SHOWN ABOVE IS: (CIRCLE ONE)					
ACTUAL			ESTIMATED		
IS PROJECTALREADY BUDGETED: (CIRCLE ONE)					
N/A	NO	YES	IF YES AMOUNT BUDGETED:	$835,186.00	

COUNCIL DISTRICT(S) IMPACTED (CIRCLE ONE)									
PARISHWIDE	1	2	3	4	5	6	7	8	9

Jeanne P. Bray 11/21/2017

_____ _____

Signature Date

QUALITY
Engineering & Surveying, LLC

18350 Hwy 42
Port Vincent, LA 70726
Office: 225-698-1600
Fax: 225-698-3367
www.qesla.com

November 21, 2017

Gordon Dove
Terrebonne Parish Consolidated Government
301 Plant Road
Houma, Louisiana 70363

Re: Terrebonne Parish Consolidated Government
Critical Facilities Hardening – Houma Police Department
14-HPD-14

Dear Mr. Dove,

It is our recommendation that Terrebonne Parish Consolidated Government select Thomassie Construction, Inc. as the winning bidder for the Critical Facilities Hardening – Houma Police Department. QES recommends that the parish accept the bid total of $697,100.00. We appreciate the opportunity to work with the parish on this project and look forward to seeing the project to completion.

Sincerely,
QUALITY ENGINEERING & SURVEYING, LLC

Jeffrey Loup, P.E.
Engineer

STATE OF LOUISIANA
JEFFREY J. LOUP
License No. 31277
PROFESSIONAL ENGINEER
IN
CIVIL ENGINEERING
11/21/17

THOMASSIE CONSTRUCTION, INC.

104 St. Peter Road Thibodaux, LA 70301

(985) 446-8033

LA License # 24904

"SEALED BID ENCLOSED"

BID TO: Terre. Par. Consolidated Govt.

BID FOR: Critical Facilities Hardening
Houma Police Department

Project: 14-HPD-14

Bids: November 21, 2017 @ 2 PM

11-21-17
1:53pm
DMD

SECTION C
LOUISIANA UNIFORM PUBLIC WORK BID FORM

TO: Terrebonne Parish Consolidated Government
8026 Main Street, 7th Floor
Houma, LA 70360

(Owner to provide name and address of owner)

BID FOR: Houma Police Department Wind Retrofit
500 Honduras Street
Houma, LA 70360

(Owner to provide name of project and other identifying information)

The undersigned bidder hereby declares and represents that she/he; a) has carefully examined and understands the Bidding Documents, b) has not received, relied on, or based his bid on any verbal instructions contrary to the Bidding Documents or any addenda, c) has personally inspected and is familiar with the project site, and hereby proposes to provide all labor, materials, tools, appliances and facilities as required to perform, in a workmanlike manner, all work and services for the construction and completion of the referenced project, all in strict accordance with the Bidding Documents prepared by:_____ and dated: _____

(Owner to provide name of entity preparing bidding documents.)

Bidders must acknowledge all addenda. The Bidder acknowledges receipt of the following **ADDENDA:** (Enter the number the Designer has assigned to each of the addenda that the Bidder is acknowledging) #1 (10/19/17) #2 (10/30/17) #3 (11/9/17) #4 (11/13/17)

TOTAL BASE BID: For all work required by the Bidding Documents (including any and all unit prices designated "Base Bid" * but not alternates) the sum of:

Six hundred ninety seven thousand one hundred Dollars ($ 697,100.00)

ALTERNATES: For any and all work required by the Bidding Documents for Alternates including any and all unit prices designated as alternates in the unit price description.

Alternate No. 1 *(Owner to provide description of alternate and state whether add or deduct)* for the lump sum of:

N/A Dollars ($ N/A)

Alternate No. 2 *(Owner to provide description of alternate and state whether add or deduct)* for the lump sum of:

N/A Dollars ($ N/A)

Alternate No. 3 *(Owner to provide description of alternate and state whether add or deduct)* for the lump sum of:

N/A Dollars ($ N/A)

NAME OF BIDDER: Thomassie Construction, Inc.
ADDRESS OF BIDDER: 104 St. Peter Rd.
Thibodaux LA 70301

LOUISIANA CONTRACTOR'S LICENSE NUMBER: 24904

NAME OF AUTHORIZED SIGNATORY OF BIDDER: __

TITLE OF AUTHORIZED SIGNATORY OF BIDDER: Thomas A. Thomassie, III, President

SIGNATURE OF AUTHORIZED SIGNATORY OF BIDDER **: ___

DATE: 11/14/17

* The Unit Price Form shall be used if the contract includes unit prices. Otherwise it is not required and need not be included with the form. The number of unit prices that may be included is not limited and additional sheets may be included if needed.

** If someone other than a corporate officer signs for the Bidder/Contractor, a copy of a corporate resolution or other signature authorization shall be required for submission of bid. Failure to include a copy of the appropriate signature authorization, if required, may result in the rejection of the bid unless bidder has complied with La. R.S. 38:2212(B)5.

BID SECURITY in the form of a bid bond, certified check or cashier's check as prescribed by LA RS 38:2218.A is attached to and made a part of this bid.

AIA® Document A310™ – 2010

Bid Bond

CONTRACTOR:
(Name, legal status and address)
Thomassie Construction, Inc.
104 St. Peter Road
Thibodaux, LA 70301

SURETY:
(Name, legal status and principal place of business)
U.S. Specialty Insurance Company
13403 Northwest Freeway
Houston, TX 77040-6094

This document has important legal consequences. Consultation with an attorney is encouraged with respect to its completion or modification.

Any singular reference to Contractor, Surety, Owner or other party shall be considered plural where applicable.

OWNER:
(Name, legal status and address)
Terrebonne Parish Consolidated Government
8026 Main Street, 7th Floor
Houma, LA 70360

BOND AMOUNT: **Five Percent (5%) of the Amount Bid----------**

PROJECT:
(Name, location or address, and Project number, if any)
Terrebonne Parish Consolidated Government
Critical Facilities Hardening
Houma Police Department
Parish Project #14-HPD-14

The Contractor and Surety are bound to the Owner in the amount set forth above, for the payment of which the Contractor and Surety bind themselves, their heirs, executors, administrators, successors and assigns, jointly and severally, as provided herein. The conditions of this Bond are such that if the Owner accepts the bid of the Contractor within the time specified in the bid documents, or within such time period as may be agreed to by the Owner and Contractor, and the Contractor either (1) enters into a contract with the Owner in accordance with the terms of such bid, and gives such bond or bonds as may be specified in the bidding or Contract Documents, with a surety admitted in the jurisdiction of the Project and otherwise acceptable to the Owner, for the faithful performance of such Contract and for the prompt payment of labor and material furnished in the prosecution thereof; or (2) pays to the Owner the difference, not to exceed the amount of this Bond, between the amount specified in said bid and such larger amount for which the Owner may in good faith contract with another party to perform the work covered by said bid, then this obligation shall be null and void, otherwise to remain in full force and effect. The Surety hereby waives any notice of an agreement between the Owner and Contractor to extend the time in which the Owner may accept the bid. Waiver of notice by the Surety shall not apply to any extension exceeding sixty (60) days in the aggregate beyond the time for acceptance of bids specified in the bid documents, and the Owner and Contractor shall obtain the Surety's consent for an extension beyond sixty (60) days.

Init.

/

AIA Document A310™ – 2010. Copyright © 1963, 1970 and 2010 by The American Institute of Architects. All rights reserved. WARNING: This AIA® Document is protected by U.S. Copyright Law and International Treaties. Unauthorized reproduction or distribution of this AIA® Document, or any portion of it, may result in severe civil and criminal penalties, and will be prosecuted to the maximum extent possible under the law.

If this Bond is issued in connection with a subcontractor's bid to a Contractor, the term Contractor in this Bond shall be deemed to be Subcontractor and the term Owner shall be deemed to be Contractor.

When this Bond has been furnished to comply with a statutory or other legal requirement in the location of the Project, any provision in this Bond conflicting with said statutory or legal requirement shall be deemed deleted herefrom and provisions conforming to such statutory or other legal requirement shall be deemed incorporated herein. When so furnished, the intent is that this Bond shall be construed as a statutory bond and not as a common law bond.

Signed and sealed this **21st** day of **November**, **2017**

(Witness)	**Thomassie Construction, Inc.** *(Contractor as Principal)* *(Seal)* (Title) Thomas A. Thomassie, III President
(Witness)	**U.S. Specialty Insurance Company** *(Surety)* *(Seal)* (Title) **Dewey Brashier, Attorney-In-Fact**

Louisiana Resident Countersigning Agent:

Charles E. Reagin, III – License #232446
BancorpSouth Insurance Services, Inc.
P. O. Box 3809, Baton Rouge, LA 70809

Init.

/

AIA Document A310™ – 2010. Copyright © 1963, 1970 and 2010 by The American Institute of Architects. All rights reserved. WARNING: This AIA® Document is protected by U.S. Copyright Law and International Treaties. Unauthorized reproduction or distribution of this AIA® Document, or any portion of it, may result in severe civil and criminal penalties, and will be prosecuted to the maximum extent possible under the law.

POWER OF ATTORNEY

AMERICAN CONTRACTORS INDEMNITY COMPANY TEXAS BONDING COMPANY
UNITED STATES SURETY COMPANY U.S. SPECIALTY INSURANCE COMPANY

KNOW ALL MEN BY THESE PRESENTS: That American Contractors Indemnity Company, a California corporation, Texas Bonding Company, an assumed name of American Contractors Indemnity Company, United States Surety Company, a Maryland corporation and U.S. Specialty Insurance Company, a Texas corporation (collectively, the "Companies"), do by these presents make, constitute and appoint:

Jim E. Brashier, Troy P. Wagener, Loren Richard Howell, Jr., Dewey Brashier, Kathleen B. Scarborough, Susan Skrmetta, John W. Nance

its true and lawful Attorney(s)-in-fact, each in their separate capacity if more than one is named above, with full power and authority hereby conferred in its name, place and stead, to execute, acknowledge and deliver **any and all bonds, recognizances, undertakings or other instruments or contracts of suretyship to include riders, amendments, and consents of surety, providing the bond penalty does not exceed _____ ******Unlimited****** _____ Dollars ($ _____ ***unlimited***).**

This Power of Attorney shall expire without further action on November 3, 2019. This Power of Attorney is granted under and by authority of the following resolutions adopted by the Boards of Directors of the Companies:

Be it Resolved, that the President, any Vice-President, any Assistant Vice-President, any Secretary or any Assistant Secretary shall be and is hereby vested with full power and authority to appoint any one or more suitable persons as Attorney(s)-in-Fact to represent and act for and on behalf of the Company subject to the following provisions:

Attorney-in-Fact may be given full power and authority for and in the name of and on behalf of the Company, to execute, acknowledge and deliver, any and all bonds, recognizances, contracts, agreements or indemnity and other conditional or obligatory undertakings, including any and all consents for the release of retained percentages and/or final estimates on engineering and construction contracts, and any and all notices and documents canceling or terminating the Company's liability thereunder, and any such instruments so executed by any such Attorney-in-Fact shall be binding upon the Company as if signed by the President and sealed and effected by the Corporate Secretary.

Be it Resolved, that the signature of any authorized officer and seal of the Company heretofore or hereafter affixed to any power of attorney or any certificate relating thereto by facsimile, and any power of attorney or certificate bearing facsimile signature or facsimile seal shall be valid and binding upon the Company with respect to any bond or undertaking to which it is attached.

IN WITNESS WHEREOF, The Companies have caused this instrument to be signed and their corporate seals to be hereto affixed, this 1st day of November, 2016.

AMERICAN CONTRACTORS INDEMNITY COMPANY TEXAS BONDING COMPANY
UNITED STATES SURETY COMPANY U.S. SPECIALTY INSURANCE COMPANY

Corporate Seals

By: _____
Daniel P. Aguilar, Vice President

A notary public or other officer completing this certificate verifies only the identity of the individual who signed the document to which this certificate is attached, and not the truthfulness, accuracy, or validity of that document.

State of California
County of Los Angeles SS:

On this 1st day of November, 2016, before me, Sabina Morgenstein, a notary public, personally appeared Daniel P. Aguilar, Vice President of American Contractors Indemnity Company, Texas Bonding Company, United States Surety Company and U.S. Specialty Insurance Company who proved to me on the basis of satisfactory evidence to be the person whose name is subscribed to the within instrument and acknowledged to me that he executed the same in his authorized capacity, and that by his signature on the instrument the person, or the entity upon behalf of which the person acted, executed the instrument.

I certify under PENALTY OF PERJURY under the laws of the State of California that the foregoing paragraph is true and correct.
WITNESS my hand and official seal.

Signature _____ (Seal)

SABINA MORGENSTEIN
Commission # 2129258
Notary Public - California
Los Angeles County
My Comm. Expires Nov 3, 2019

I, Kio Lo, Assistant Secretary of American Contractors Indemnity Company, Texas Bonding Company, United States Surety Company and U.S. Specialty Insurance Company, do hereby certify that the above and foregoing is a true and correct copy of a Power of Attorney, executed by said Companies, which is still in full force and effect; furthermore, the resolutions of the Boards of Directors, set out in the Power of Attorney are in full force and effect.

In Witness Whereof, I have hereunto set my hand and affixed the seals of said Companies at Los Angeles, California this 21st day of November, 2017.

Corporate Seals

_____
Kio Lo, Assistant Secretary

Bond No. N/A
Agency No. 17033

Thomassie Construction, Inc.

project management • general contracting

www.thomassieconstruction.com info@thomassieconstruction.com

104 St. Peter St. • Thibodaux, LA 70301 • (985) 446-8033 • Fax (985) 446-8034

CORPORATE RESOLUTION

BE IT RESOLVED by the Board of Directors of THOMASSIE CONSTRUCTION, INC. that

THOMAS A. THOMASSIE, III or **MARTHA T. THOMASSIE** or **THADDEUS BENTON THOMPSON**, be and they are hereby

authorized and empowered on behalf of this corporation:

To represent Thomassie Construction, Inc. at any bid opening from any private or public entity.

To sign on any bid applications, to make amendments or corrections to any of the applications or bid proposals on behalf of this corporation.

To sign on any contract, to make amendments or corrections to any of the contract on behalf of this corporation.

BE IT FURTHER RESOLVED that Thomas A. Thomassie, III or Martha T. Thomassie or Thaddeus Benton Thompson, be and they are hereby authorized to incorporate into the above referenced documents such terms and conditions as they in their uncontrolled discretion, may deem fitting, proper and necessary, and all they may do by virtue of this resolution is hereby ratified and approved.

Thibodaux, Louisiana this 23nd day of February 2015

MARTHA T. THOMASSIE, SECRETARY

CERTIFICATE

I, the undersigned, do hereby certify that I am the Secretary of THOMASIE CONSTRUCTION, INC. and that the above and foregoing is a true, exact and correct copy of resolution unanimously passed at a special meeting of the Board of Directors of THOMASSIE CONSTRUCTION, INC., held at the domicile of said corporation on December 2, 2013, in the parish of Lafourche, State of Louisiana, with a quorum being present and that said resolution is still in full force and effect.

THUS DONE AND SIGNED on this 21st day of the month November, 2017.

MARTHA T. THOMASSIE, SECRETARY

APPROVED BY:

THOMAS A. THOMASSIE, III
PRESIDENT

MARTHA T. THOMASSIE
SECRETARY, TREASURER

OFFERED BY:
SECONDED BY:

R E S O L U T I O N

A resolution awarding and authorizing the signing of the construction Contract for Parish Project No. 14-HPD-14, Critical Facilities Hardening – Houma Police Department (HMGP), Terrebonne Parish Consolidated Government, Terrebonne Parish, Louisiana, and authorizing the issuance of the Notice to Proceed.

WHEREAS, the Terrebonne Parish Consolidated Government did receive construction bids on Parish Project No. 14-HPD-14, Critical Facilities Hardening – Houma Police Department (HMGP), Terrebonne Parish, Louisiana, and,

WHEREAS, the lowest and best bid was that submitted by Thomassie Construction, Inc., in the amount of $687,100.00, and

NOW, THEREFORE, BE IT RESOLVED that the Terrebonne Parish Consolidated Government award the construction contract to Thomassie Construction, Inc., in the amount of $687,100.00, and

BE IT FURTHER RESOLVED, that the President of Terrebonne Parish Consolidated Government, be and he is hereby authorized and empowered to sign a construction contract for and on behalf of the Terrebonne Parish Consolidated Government with Thomassie Construction, Inc., upon receipt of the performance bond in the amount of the contract price, and

BE IT FURTHER RESOLVED, that upon receipt of required certificates of insurance evidencing coverage as provided in the project specifications and upon execution and recordation of all contract documents, that the Engineer is hereby authorized to issue the Notice to Proceed to the Contractor to commence construction of the project, and

WHEREUPON the motion was put to a vote and the vote thereon was as follows:

YEAS:
NAYS:
NOT VOTING:
ABSENT

And the Chairman declared the resolution adopted on this _____ day of _____, 2017.

* * * * * *

I, VENITA H. CHAUVIN, Clerk of the Terrebonne Parish Council, Houma, Louisiana, do hereby certify that the foregoing is a true and correct copy of the RESOLUTION adopted by the Terrebonne Parish Council on _____, 2017, at which meeting a quorum was present.

GIVEN UNDER MY OFFICIAL SIGNATURE AND SEAL OF OFFICE THIS _____ DAY OF _____, 2017.

_____
VENITA H. CHAUVIN, CLERK
TERREBONNE PARISH COUNCIL

Category Number:
Item Number: 10.

Monday, November 27, 2017

Item Title:
Award Falgout Canal Paving

Item Summary:
RESOLUTION: Awarding and authorizing the signing of the construction Contract for Parish Project No. 17-PAV-01, Falgout Canal Road Paving Project, Terrebonne Parish Consolidated Government, Terrebonne Parish, Louisiana, and authorizing the issuance of the Notice to Proceed.

ATTACHMENTS:

Description	Upload Date	Type
Executive Summary	11/22/2017	Executive Summary
Resolution	11/22/2017	Resolution
Backup	11/22/2017	Backup Material

EXECUTIVE SUMMARY

(REQUIRED FOR ALL SUBMISSIONS)

PROJECT TITLE	
17-PAV-01	Falgout Canal Road Repaving

PROJECT SUMMARY (200 WORDS OR LESS)
Repaving of Falgout Canal Road

PROJECT PURPOSE & BENEFITS (150 WORDS OR LESS)
This resolution allows for the awarding of the bid to Huey Stockstill, LLC.

TOTAL EXPENDITURE				
Base Bid - $2,379,373.52 Alternate No. 1 - $308,983.45 Total Bid - $2,688,356.97				
AMOUNT SHOWN ABOVE IS: (CIRCLE ONE)				
	ACTUAL		**ESTIMATED**	
IS PROJECTALREADY BUDGETED: (CIRCLE ONE)				
N/A	**NO**	**YES**	**IF YES AMOUNT BUDGETED:**	**$4,047,447.00**

COUNCIL DISTRICT(S) IMPACTED (CIRCLE ONE)									
PARISHWIDE	1	2	3	4	5	6	7	8	9

Jeanne P. Bray 11/21/2017

_____ _____

Signature Date

OFFERED BY:
SECONDED BY:

R E S O L U T I O N

A resolution awarding and authorizing the signing of the construction Contract for Parish Project No. 17-PAV-01, Falgout Canal Road Paving Project, Terrebonne Parish Consolidated Government, Terrebonne Parish, Louisiana, and authorizing the issuance of the Notice to Proceed.

WHEREAS, the Terrebonne Parish Consolidated Government did receive construction bids on Parish Project No. 17-PAV-01, Falgout Canal Road Paving Project, Terrebonne Parish, Louisiana, and,

WHEREAS, the lowest and best bid was that submitted by Huey P Stockstill, LLC, in the amount of $2,379,373.52 Base Bid, $390,701.30 Alternate No. 1, for a total cost of $2,688,356.97, and

NOW, THEREFORE, BE IT RESOLVED that the Terrebonne Parish Consolidated Government award the construction contract to Huey P Stockstill, LLC, in the total amount of $2,688,356.97, and

BE IT FURTHER RESOLVED, that the President of Terrebonne Parish Consolidated Government, be and he is hereby authorized and empowered to sign a construction contract for and on behalf of the Terrebonne Parish Consolidated Government with Huey P Stockstill, LLC, upon receipt of the performance bond in the amount of the contract price, and

BE IT FURTHER RESOLVED, that upon receipt of required certificates of insurance evidencing coverage as provided in the project specifications and upon execution and recordation of all contract documents, that the Engineer is hereby authorized to issue the Notice to Proceed to the Contractor to commence construction of the project, and

WHEREUPON the motion was put to a vote and the vote thereon was as follows:

YEAS:
NAYS:
NOT VOTING:
ABSENT

And the Chairman declared the resolution adopted on this _____ day of _____, 2017.

* * * * * *

I, VENITA H. CHAUVIN, Clerk of the Terrebonne Parish Council, Houma, Louisiana, do hereby certify that the foregoing is a true and correct copy of the RESOLUTION adopted by the Terrebonne Parish Council on _____, 2017, at which meeting a quorum was present.

GIVEN UNDER MY OFFICIAL SIGNATURE AND SEAL OF OFFICE THIS _____ DAY OF _____, 2017.

_____
VENITA H. CHAUVIN, CLERK
TERREBONNE PARISH COUNCIL

ENGINEERING LLC

Coastal Design & Infrastructure
197 Elysian Drive
Houma, LA 70363
P: (985) 219-1000 | F: (985) 475-7014
www.gisyeng.com

November 21, 2017

Terrebonne Parish Consolidated Government
2000 St. Louis Canal Rd.
Houma, Louisiana 70360

Attention: **Ms. Jeanne Bray, Capital Projects Administrator**

Subject: **Bid Evaluation & Award Recommendation**

Reference: **Falgout Canal Road Repaving**
Parish Project No. 17-PAV-01
GIS Project No. 39130-1041/1042

Ms. Bray:

GIS Engineering, LLC has reviewed the bids received on November 21, 2017 for the above referenced project. This letter addresses our findings and recommendations. The bid results are listed below:

Company Name	License No.	Base Bid	Alternate No. 1	Total Base Bid & Alternate No. 1
Huey P. Stockstill, LLC	62139	$ 2,379,373.52	$ 308,983.45	$ 2,688,356.97
Barriere Construction, Co. LLC	6276	$ 2,265,912.95	$ 424,128.50	$ 2,690,041.45
Byron E. Talbot Contractor, Inc.	12198	$ 2,648,519.11	$ 390,701.30	$ 3,039,220.41
Onshore Materials, LLC	48869	$ 2,895,308.79	$ 286,693.65	$ 3,182,002.44
Byron E. Talbot Contractor, Inc.	12198	$ 2,648,519.11	$ 390,701.30	$ 3,039,220.41
Boh Bros. Construction Co., LLC	2179	$ 3,599,271.60	$ 301,019.00	$ 3,900,290.60

Enclosed herewith is the "Bid Evaluation Summary" containing the evaluation results of the bids received and the "Bid Tabulation Summary" outlining each of the dollar amounts of the received bid.

EVALUATION

Huey P. Stockhill, LLC was the apparent low bidder at the time of the bid in the amount of $2,379,373.52 for the Base Bid and $308,983.45 for Alternate No. 1. Upon evaluation of the bids, this bid was found to be responsive.

RECOMMENDATION:

Based on our evaluation and contingent upon concurrence by the Terrebonne Parish Consolidated Government and its legal counsel, GIS Engineering, LLC recommends award of the Base Bid and Alternate No. 1 for the Falgout Canal Road Repaving Project Contract to the responsive low bidder, **Huey P. Stockhill, LLC**, in the amount of **TWO MILLION, SIX HUNDRED EIGHTY-EIGHT THOUSAND, THREE HUNDRED FIFTY-SIX DOLLARS AND NINETY-SEVEN CENTS ($2,688,356.97)**.

If you have any questions or require any additional information, please contact me at (225) 408-0932.

Sincerely,

Seneca Toussant, P.E.
Director of Operations
GIS Engineering, LLC

Enclosures

Cc: Mr. Oneil Malbrough – GIS
Dustin Malbrough – GIS

Terrebonne Parish Consolidated Government
Falgout Canal Road Repaving Project
TPCG Project No. 17-PAV-01
GIS Project No. 39130-1041/1042
Bid Evaluation

		Huey P. Stockhill, LLC	Barriere Construction Co., LLC	Byron E. Talbot Contractor, Inc.	Onshore Materials, LLC	Boh Bros. Construction, LLC
	Contractor Name:					
	Base Bid:	$ 2,379,373.52	$ 2,265,912.95	$ 2,648,519.11	$ 2,895,308.79	$ 3,599,271.60
	Alternate No. 1	$ 308,983.45	$ 424,128.50	$ 390,701.30	$ 286,693.65	$ 301,019.00
	Total Base Bid & Alternate No. 1	$ 2,688,356.97	$ 2,690,041.45	$ 3,039,220.41	$ 3,182,002.44	$ 3,900,290.60
Misc.	Delivered prior to 2:00 p.m.	Y	Y	Y	Y	Y
	Proposal Sealed in an envelope including Name and Address of Bidder	N/A - Online Bid	Y	N/A - Online Bid	Y	N/A - Online Bid
	Envelope States:					
	Falgout Canal Road Repaving Project Parish Project No. 17-PAV-01	N/A - Online Bid	Y	N/A - Online Bid	Y	N/A - Online Bid
License Verification	Licensed Contractor in the State of Louisiana	Y	Y	Y	Y	Y
	Work Classification: Highway, Street, and Bridge Construction	Y	Y	Y	Y	Y
	Shows License Number on the outside of the Sealed Envelope Containing Bid	N/A - Online Bid	Y	N/A - Online Bid	Y	N/A - Online Bid
Bid Form	Submitted on Proposal Forms provided In the Contract Documents	Y	Y	Y	Y	Y
	All blank spaces on Bid Forms shall be filled in ink, or typed, in both words and figures (if word and figure disagree the word shall be binding)	Y	Y	Y	Y	Y
	If any corrections are made, the alteration must be crossed out, the correct number written, and the change should be initialed	No Corrections Made	No Corrections Made	No Corrections Made	No Corrections Made	No Corrections Made
	Written evidence of authority of the person signing the bid for public works submitted at the time of bidding in accordance with LA R.S. 38:2212 (B) (5)	Y	Y	Y	Y	Y
	Contractor's State License Number is Typed/Printed below the firm name and signature on the Bid Form	Y	Y	Y	Y	Y
	Includes verification of receipt of Addenda (the numbers of which filled in on the Proposal Document Form - 4 total	Y	Y	Y	Y	Yes but numbers only
	Includes the address to which communications regarding the Bid are to be directed	Y	Y	Y	Y	Y
Bid Bond	Bid Guaranty in amount of 5% of Proposal Made payable to "Terrebonne Parish Consolidated	Y	Y	Y	Y	Y
	Bid Bond signed by an authorized officer, owner or partner of the bidding firm, or an agent or attorney-in-fact	Y	Y	Y	Y	Y
	Bid Bond signed by the surety's agent or attorney-in-fact	Y	Y	Y	Y	Y
	Bid Bond shall be accompanied by a notarized document granting general power of attorney to the surety's signer	Y	Y	Y	Y	Y
	Bid Bond shall be written by a surety or insurance company currently on the US Dept. of the Treasury Financial Management Service's list of approved bonding companies which is published annually in the Federal Register, or by a Louisiana domiciled insurance company with at least a A- rating in the latest printing of the A.M. Best's Key Rating Guide to write individual bonds up to 10% of policyholders' surplus as shown in the A.M. Best's Key Rating Guide	Y	Y	Y	Y	Y
Corporation Partnerships	Bids by corporations shall state the full legal corporate name thereof, and the corporate address and the state of incorporation	Y	Y	Y	Y	Y
	Bid by partnerships must indicate the legal name of the partnership, with the official address of the partnership and state of formation of partnership	N/A	N/A	N/A	N/A	N/A
	Evidence of Corporate or Partnership Authority Included in the bid Documents	Y	Y	Y	Y	Y
Specification Compliance	Contractor in compliance with all requirements of Special Provisions and Technical Specifications	Y	Y	Y	Y	Y

Terrebonne Parish Consolidated Government
Falgout Canal Road Repaving Project
TPCG Project No. 17-PAV-01
GIS Project No. 39130-1041/1042

Bid Tabulation

Ref No.	Description	Qty.	UOM	Engineer's Estimate		Huey P. Stockstill, LLC		Barriere Construction, Co. LLC		Byron E. Talbot Contractor, Inc.		Onshore Materials, LLC		Boh Bros. Construction Co., LLC	
				Unit Price	Unit Price Ext.	Unit Price	Unit Price Ext.	Unit Price	Unit Price Ext.	Unit Price	Unit Price Ext.	Unit Price	Unit Price Ext.	Unit Price	Unit Price Ext.
201-01-00100	Clearing & Grubbing	5.18	Acre	$ 1,000.00	$ 5,180.00	$ 3,200.00	$ 16,576.00	$ 1,000.00	$ 5,180.00	$ 6,500.00	$ 33,670.00	$ 3,500.00	$ 18,130.00	$ 5,000.00	$ 25,900.00
202-01-00100	Removal of Structures and Obstructions	1	LS	$ 20,000.00	$ 20,000.00	$ 180,000.00	$ 180,000.00	$ 40,000.00	$ 40,000.00	$ 210,000.00	$ 210,000.00	$ 226,500.00	$ 226,500.00	$ 100,000.00	$ 100,000.00
202-02-38500	Removal of Surfacing and Stabilized Base	14,892.5	SY	$ 10.00	$ 148,925.00	$ 6.00	$ 89,355.00	$ 8.00	$ 119,140.00	$ 6.50	$ 96,801.25	$ 8.50	$ 126,586.25	$ 7.00	$ 104,247.50
203-03-00100	Embankment	7,597.63	CY	$ 18.00	$ 136,757.34	$ 10.00	$ 75,976.30	$ 15.00	$ 113,964.45	$ 18.50	$ 140,556.16	$ 25.00	$ 189,940.75	$ 45.00	$ 341,893.35
204-02-00100	Temporary Hay or Straw Bales	24	Each	$ 20.00	$ 480.00	$ 12.50	$ 300.00	$ 25.00	$ 600.00	$ 25.00	$ 600.00	$ 11.50	$ 276.00	$ 100.00	$ 2,400.00
204-06-00100	Temporary Silt Fencing	11,600	LF	$ 1.50	$ 17,400.00	$ 1.50	$ 17,400.00	$ 2.00	$ 23,200.00	$ 2.50	$ 29,000.00	$ 2.30	$ 26,680.00	$ 2.00	$ 23,200.00
302-01-00700	Class II Base Course (Stone)	6,899.1	CY	$ 90.54	$ 624,644.51	$ 86.00	$ 593,322.60	$ 100.00	$ 689,910.00	$ 87.00	$ 600,221.70	$ 72.00	$ 496,735.20	$ 90.00	$ 620,919.00
401-01-00100	Agregate Surface Course (Net Section)	4,007.5	CY	$ 68.00	$ 272,510.00	$ 53.50	$ 214,401.25	$ 40.00	$ 160,300.00	$ 65.00	$ 260,487.50	$ 61.50	$ 246,461.25	$ 90.00	$ 360,675.00
402-01-00100	Traffic Maintenance Aggregate (Vehicular Measurement)	150.0	CY	$ 50.00	$ 7,500.00	$ 15.00	$ 2,250.00	$ 30.00	$ 4,500.00	$ 85.50	$ 12,825.00	$ 115.00	$ 17,250.00	$ 20.00	$ 3,000.00
502-01-00100	Superpave Asphaltic Concrete	11,422.8	Tons	$ 90.00	$ 1,028,052.00	$ 72.00	$ 822,441.60	$ 75.00	$ 856,710.00	$ 78.00	$ 890,978.40	$ 82.50	$ 942,381.00	$ 109.00	$ 1,245,085.20
509-01-00100	Cold Planing Asphaltic Pavement	37,760	SY	$ 2.00	$ 75,520.00	$ 1.00	$ 37,760.00	$ 1.20	$ 45,312.00	$ 1.08	$ 40,780.80	$ 1.50	$ 56,640.00	$ 2.00	$ 75,520.00
510-04-00100	Pavement Patching	100	Tons	$ 100.00	$ 10,000.00	$ 150.00	$ 15,000.00	$ 155.00	$ 15,500.00	$ 165.00	$ 16,500.00	$ 171.00	$ 17,100.00	$ 200.00	$ 20,000.00
713-01-00100	Temporary Signs and Barricades	1	LS	$ 100,000.00	$ 100,000.00	$ 21,000.00	$ 21,000.00	$ 20,000.00	$ 20,000.00	$ 67,000.00	$ 67,000.00	$ 72,000.00	$ 72,000.00	$ 215,000.00	$ 215,000.00
713-02-00100	Temporary Pavement Markings (4" Width)	21,254	LF	$ 0.40	$ 8,501.60	$ 0.18	$ 3,825.72	$ 0.20	$ 4,250.80	$ 0.09	$ 1,912.86	$ 0.40	$ 8,501.60	$ 0.20	$ 4,250.80
727-01-00100	Mobilization	1	LS	$ 250,000.00	$ 250,000.00	$ 200,000.00	$ 200,000.00	$ 100,000.00	$ 100,000.00	$ 85,000.00	$ 85,000.00	$ 254,000.00	$ 254,000.00	$ 350,000.00	$ 350,000.00
731-02-00100	Reflectorized Raised Pavement Markers	561	Each	$ 7.00	$ 3,927.00	$ 5.00	$ 2,805.00	$ 6.00	$ 3,366.00	$ 6.50	$ 3,646.50	$ 6.80	$ 3,814.80	$ 7.00	$ 3,927.00
732-01-01000	Plastic Pavement Striping (4" Width) (Thermoplastic 90 Mil)	44,953	LF	$ 1.50	$ 67,429.50	$ 0.55	$ 24,724.15	$ 0.60	$ 26,971.80	$ 0.83	$ 37,310.99	$ 0.70	$ 31,467.10	$ 0.75	$ 33,714.75
732-01-02080	Plastic Pavement Striping (24" Width) (Thermoplastic 125 Mil)	31	LF	$ 15.00	$ 465.00	$ 10.00	$ 310.00	$ 17.00	$ 527.00	$ 3.65	$ 113.15	$ 3.80	$ 117.80	$ 20.00	$ 620.00
732-03-02000	Plastic Pavement Striping (Broken Line) (4" Width) (Thermoplastic 90 Mil)	4	Mile	$ 4,500.00	$ 18,108.00	$ 950.00	$ 3,822.80	$ 1,000.00	$ 4,024.00	$ 1,075.00	$ 4,325.80	$ 1,110.00	$ 4,466.64	$ 1,000.00	$ 4,024.00
739-01-00100	Hydro-Seeding	5.18	Acre	$ 1,800.00	$ 9,324.00	$ 1,265.00	$ 6,552.70	$ 1,500.00	$ 7,770.00	$ 1,800.00	$ 9,324.00	$ 2,630.00	$ 13,623.40	$ 1,500.00	$ 7,770.00
740-01-00100	Construction Layout	1	LS	$ 50,000.00	$ 50,000.00	$ 45,000.00	$ 45,000.00	$ 20,000.00	$ 20,000.00	$ 32,500.00	$ 32,500.00	$ 60,000.00	$ 60,000.00	$ 25,000.00	$ 25,000.00
740-02-00100	Utility Oversight and Coordination	1	LS	$ 5,000.00	$ 5,000.00	$ 1,000.00	$ 1,000.00	$ 100.00	$ 100.00	$ 6,500.00	$ 6,500.00	$ 20,000.00	$ 20,000.00	$ 20,000.00	$ 20,000.00
S-001	Saw Cut (Full Depth) Existing Asphaltic Concrete	35,190	IN LF	$ 2.00	$ 70,380.00	$ 0.01	$ 351.90	$ 0.01	$ 351.90	$ 1.00	$ 35,190.00	$ 0.80	$ 28,152.00	$ 0.25	$ 8,797.50
S-002a	Rumble Strips (Centerline)	4.0	Mile	$ 1,500.00	$ 6,000.00	$ 520.00	$ 2,080.00	$ 350.00	$ 1,400.00	$ 2,750.00	$ 11,000.00	$ 2,850.00	$ 11,400.00	$ 275.00	$ 1,100.00
S-002b	Rumble Strips (6" Shoulder)	8.1	Mile	$ 1,500.00	$ 12,150.00	$ 385.00	$ 3,118.50	$ 350.00	$ 2,835.00	$ 2,750.00	$ 22,275.00	$ 2,850.00	$ 23,085.00	$ 275.00	$ 2,227.50
			Total Base Bid:	**$**	**2,948,253.95**	**$**	**2,379,373.52**	**$**	**2,265,912.95**	**$**	**2,648,519.11**	**$**	**2,895,308.79**	**$**	**3,599,271.60**
502-01-00100	Superpave Asphaltic Concrete	4,067.0	Tons	$ 90.00	$ 366,030.00	$ 72.00	$ 292,824.00	$ 75.00	$ 305,025.00	$ 78.00	$ 317,226.00	$ 82.50	$ 335,527.50	$ 103.00	$ 418,901.00
302-01-00700	Class II Base Course (Stone)	2,619.7	CY	$ 90.54	$ 237,187.64	$ 86.00	$ 225,294.20	$ 105.00	$ 275,068.50	$ 124.00	$ 324,842.80	$ 72.00	$ 188,618.40	$ 90.00	$ 235,773.00
S-002c	Rumble Strips (12" Shoulder)	8.1	Mile	$ 2,000.00	$ 16,200.00	$ 520.00	$ 4,212.00	$ 500.00	$ 4,050.00	$ 3,250.00	$ 26,325.00	$ 3,370.00	$ 27,297.00	$ 275.00	$ 2,227.50
S-002b	Rumble Strips (6" Shoulder)	(8.1)	Mile	$ 1,500.00	$ (12,150.00)	$ 385.00	$ (3,118.50)	$ 350.00	$ (2,835.00)	$ 2,750.00	$ (22,275.00)	$ 2,850.00	$ (23,085.00)	$ 275.00	$ (2,227.50)
401-01-00100	Aggregate Surface Course (Net Section)	(3,929.5)	CY	$ 68.00	$ (267,206.00)	$ 53.50	$ (210,228.25)	$ 40.00	$ (157,180.00)	$ 65.00	$ (255,417.50)	$ 61.50	$ (241,664.25)	$ 90.00	$ (353,655.00)
			Total Alternate No 1:	**$**	**340,061.64**	**$**	**308,983.45**	**$**	**424,128.50**	**$**	**390,701.30**	**$**	**286,693.65**	**$**	**301,019.00**
			Total:	**$**	**3,288,315.59**	**$**	**2,688,356.97**	**$**	**2,690,041.45**	**$**	**3,039,220.41**	**$**	**3,182,002.44**	**$**	**3,900,290.60**

Category Number:
Item Number: 11.

Monday, November 27, 2017

Item Title:
Country Drive Change Order 8

Item Summary:
RESOLUTION: Authorizing the execution of Change Order No. 8 for the Construction Agreement for Parish Project No. 97-PAV-21, State Project No. H.007351, Country Drive Widening Phase A.

ATTACHMENTS:

Description	Upload Date	Type
Executive Summary, Resolution & backup	11/22/2017	Backup Material

EXECUTIVE SUMMARY

(REQUIRED FOR ALL SUBMISSIONS)

PROJECT TITLE	
97-PAV-21	Country Drive Widening Phase A

PROJECT SUMMARY (200 WORDS OR LESS)
Widening of Country Drive

PROJECT PURPOSE & BENEFITS (150 WORDS OR LESS)
The purpose of this change order is to adjust quantities due to the relocation of drain lines and heavy rains. This Change Order No. 8 will increase contract price by $173,084.39 and increase the construction time by 26 days.

TOTAL EXPENDITURE					
$182,295.97					
AMOUNT SHOWN ABOVE IS: (CIRCLE ONE)					
	ACTUAL			ESTIMATED	
IS PROJECTALREADY BUDGETED: (CIRCLE ONE)					
N/A	NO	YES	IF YES AMOUNT BUDGETED:	$4,700,000	

COUNCIL DISTRICT(S) IMPACTED (CIRCLE ONE)									
PARISHWIDE	1	2	3	4	5	6	7	8	9

Joan E. Schexnayder

Signature

11/22/2017

Date

OFFERED BY:
SECONDED BY:

RESOLUTION

A resolution authorizing the execution of Change Order No. 8 for the Construction Agreement for Parish Project No. 97-PAV-21, State Project No. H.007351, Country Drive Widening Phase A, Terrebonne Parish, Louisiana.

WHEREAS, the Terrebonne Parish Consolidated Government entered into a contract with Huey P. Stockstill, LLC, for Parish Project No. 97-PAV-21, State Project No. H.007351, Country Drive Widening Phase A, Terrebonne Parish Consolidated Government, Terrebonne Parish, Louisiana, and

WHEREAS, TPCG is desirous of constructing the widening of Country Drive, and

WHEREAS, issues have arisen with driveways and drainage, and

WHEREAS, TPCG is desirous of rectifying these issues, and

WHEREAS, this change order will increase the overall contract price by One Hundred Seventy Three Thousand, Eighty Four Dollars and Thirty Nine Cents ($173,084.39) with an increase in Contract Time of twenty-six (26) days, and

WHEREAS, this Change Order No. 8 has been recommended by the Engineer, Meyer Engineers, Ltd., for this project.

NOW, THEREFORE BE IT RESOLVED that the Terrebonne Parish Council on behalf of the Terrebonne Parish Consolidated Government, does hereby approve and authorize the execution of Change Order No. 8 by Terrebonne Parish President Gordon E. Dove for the construction agreement with Huey P. Stockstill, LLC for Parish Project No. 97-PAV-21, State Project No. H.007351, Country Drive Widening Phase A, Terrebonne Parish, Louisiana, for a increase of One Hundred Seventy Three Thousand, Eighty Four Dollars and Thirty Nine Cents ($173,084.39) with an increase in Contract Time of twenty-six (26) days contingent upon a budget amendment, and

BE IT FURTHER RESOLVED that a certified copy of the resolution be forwarded to Engineer, Meyer Engineers, Ltd.

THERE WAS RECORDED:
YEAS:
NAYS:
ABSENT & NOT VOTING:

And the Chairman declared the resolution adopted on this _____ day of _____, 2017.

* * * * * *

I, Venita H. Chauvin, Clerk of the Terrebonne Parish Council, Houma, Louisiana, do hereby certify that the foregoing is a true and correct copy of the RESOLUTION adopted by the Terrebonne Parish Council on _____, 2017, at which meeting a quorum was present.

GIVEN UNDER MY OFFICIAL SIGNATURE AND SEAL OF OFFICE THIS _____ DAY OF _____, 2017.

_____
VENITA H. CHAUVIN, CLERK
TERREBONNE PARISH COUNCIL

Richard C. Meyer, P.E.
President
David H. Dupré, P.E.
Vice President
Mark A. Schutt, P.E.
Ann M. Theriot, P.E.
James J. Papia, N.C.A.R.B.,A.I.A.
Eric M. Colwart, P.E.
Kenneth J. Belou, P.E.

Meyer Engineers, Ltd.

Charles E. Meyer, P.E.
Executive Vice President
Jitendra C. Shah, P.E.
Vice President
Matthew J. Falati, P.E.
Elena G. Anderson, IIDA
LA Reg. ID #1353

P.O. Box 763 / Metairie, Louisiana 70004
E-mail: meyer@meyer-e-l.com
Fax: 504-887-5056

November 26, 2017

Ms. Joan E. Schexnayder, P.E. – Staff Engineer
Terrebonne Parish C.G. - Engineering Division
P. O. Box 2768
Houma, LA 70361

Re: Country Drive Widening Phase A
State Project No. H.007351
A/E Project No. 20-1541

Dear Ms. Schexnayder,

Enclosed are three (3) originals of Change Order No. 8 in the Additive amount of $173,084.39 for the above referenced project.

See Attachment No. 1 for description, justification and cost breakdowns.

We recommend approval of Change Order No. 8 in the Additive amount of $173,084.39. The Contract duration of 376 is increased by 26 working days by this Change Order to 402 Working Days.

Please execute and return all originals to our office for further processing. Once fully executed, we will return one (1) original to your office for your file.

Sincerely,

Meyer Engineers, Ltd.

Richard C. Meyer

Enclosures

CHANGE ORDER

No. 8

PROJECT: Country Drive Widening Phase A

DATE OF ISSUANCE: 11/22/17

OWNER:
Terrebonne Parish Consolidated Government

CONTRACTOR:
Huey P. Stockstill, LLC

OWNER'S Project No. 97-PAV-21

ENGINEER: Meyer Engineers Ltd

CONTRACT FOR:
State Project H.007351.6

ENGINEER's Project No. 20-1425

You are directed to make the following changes in the Contract Documents.

Description: Adjustments of Manholes, Additional Retaining Walls, Driveway Modifications and related work

Purpose of Change Order: Refer to Attachment No. 1 of this change order for Justification and Explanation along with Contractor Cost Proposal

Attachments: (List documents supporting change)
Attachment No. 1 Including Justification, Item descriptions and Cost Backup

CHANGE IN CONTRACT PRICE	CHANGE IN CONTRACT TIME
Original Contract Price $ 3,938,352.90	Original Contract Time $ 320 days or date
Previous Change Orders No. 1 to No. 7 $ 568,618.66	Net change from previous Change Order $ 56 days
Contract Price prior to this Change Order $ 4,506,971.56	Contract Time Prior to this Change Order $ 376 days or date
Net Increase (decrease) of this Change Order $ 173,084.39	Net Increase (decrease) of this Change Order $ 26 days
Contract Price with all approved Change Orders $ 4,680,055.95	Contract Time with all approved Change Order $ 402 days or date

RECOMMENDED: APPROVED: APPROVED:

by _____ Engineer by _____ Owner by _____ Contractor

Attachment No. 1

Change Order No. 8

Country Drive Widening Phase A

A/E 20-1541 November 22, 2017

Scope of Change:

1.) Retrofit Newly Poured Driveways: 30 Each @ $754.29

ADD: $22,358.70

2.) Additional Retaining Walls: 45 Each at $1,502.99

ADD: $67,634.55

3) Gratings for Additional Retaining Walls: 45 Each @ $1,300.76

ADD: $58,543.20

4) Adjustment of Manholes: 15 Each @ $2,777.78

ADD: $41,667.70

5) Frames Added to Adjusted Retaining Walls: 15 Each @ $ 1,664.74

ADD: $24,971.10

6) Modification to Driveways Beyond ROW

Removal of Concrete: 100 SY @ $7.40: ADD: $740.00

Replace Concrete Drives: 100 SY @ $54.44: ADD: $5,444.00

Additional Fill Material: 100 CY @ $41.26: ADD: $4,126.00

Modify One Yard Drain: 1 LS @ $769.23: ADD: $769.23

ADD: $11,079.23

7) Top Soil Along Roadway Shoulder: 906 CY @ $36.58

ADD: $33,141.48

8) Credit on Underrun Items

Line Item 0014 Aggregate Surface Course: Deduct 500 CY @ $700.00

Deduct: ($35,000.00)

Line Item 0017 Asphaltic Concrete Turnouts: Deduct 100 Tons @ $120.00

Deduct: ($12,000.00)

Line Item 0064 Class R Concrete: Deduct 33 CY @ $400.00

Deduct: (13,200.00)

Line Item 0902 Conflict Sewer Manholes: Deduct 1 LS @ $26,111.57

Deduct: ($26,111.57)

UNDERRUN DEDUCT: ($86,311.57)

TOTAL ADDITIVE: $173,084.39

Justification:

1) Corners of newly placed driveways while placed in accordance with details provided in contract documents exhibited cracks and failures at the corners after having been subject to vehicle loads accessing the driveways. As a result additional concrete was added by drilling additional rebar in existing concrete and placing new concrete to widen the driveways.
2) Terrebonne Parish Consolidated Government Change Order #1 dated 6/21/16 created an item to provide a concrete retaining wall around newly installed CB-04 drainage structures that had been relocated closer to road to newly installed Manholes to avoid utility conflicts. Retaining walls were needed to prevent shoulder material from eroding into the grating structures. The same safety necessity was deemed warranted for newly installed CB-01 Basins not originally thought to have need for the retaining walls.
3) For additional needed safety protection, drain inlet gratings were installed along with the retaining walls noted in Item #2 above.
4) Subsequent to Milling operation and removal of 2" of existing Asphaltic Roadway the existing slope was measured and found to be 2.1% best case scenario. Rather than risk a considerable overrun of Asphaltic Concrete estimated to be approximately $75,000.00 to obtain the 2.5% design slope the 2" design thickness was placed and the 2.1%s slope deemed acceptable. Fifteen manholes incorporated with the new roadway shoulder now were high though built to design grade. The manholes in question were adjusted downward

to match the asphalt, the cost of which is considerably less than additional Asphaltic Concrete.

5) Retaining walls added as noted in Item #2 above adjacent to newly installed manholes were in need of modification to match the adjusted manholes addressed in Item #4 above. Likewise these modified gratings were in need of inlet gratings as well.
6) After having raised and widened the existing roadway and filled previously existing ditch, the slope on a number of driveways was drastically increased causing difficulty to access. To void damages to vehicles because of the increase slope the driveways were needed to be removed and replaced beyond the right of way. Right of Entries were obtained from residents prior to proceeding with these work Items.
7) In order to better enhance Seeding and Fertilizer, top soil was added in the areas adjacent to the new roadway shoulder.
8) Existing Items that have been completed and have resulted in underrun of quantitiy.

Time Extension:

Add 26 Working Days to this Contract